SOLVED GATE (ELECTRONICS AND COMMUNICATION ENGINEERING) 2022

Engineering Mathematics and Technical Section

Q. No. 1–25 Multiple Choice Question (MCQ) Carry One Mark Each

1. Consider the two-dimensional vector field $\vec{F}(x,y) = x\hat{i} + y\hat{j}$, where $\hat{i}$ and $\hat{j}$ denote the unit vectors along the x-axis and the y-axis, respectively. A contour C in the x-y plane, as shown in the figure, is composed of two horizontal lines connected at the two ends by two semicircular arcs of unit radius. The contour is traversed in the counter-clockwise sense. The value of the closed path integral

$$\oint_C \vec{F}(x,y)\cdot(dx\hat{i} + dy\hat{j})$$

is _____.

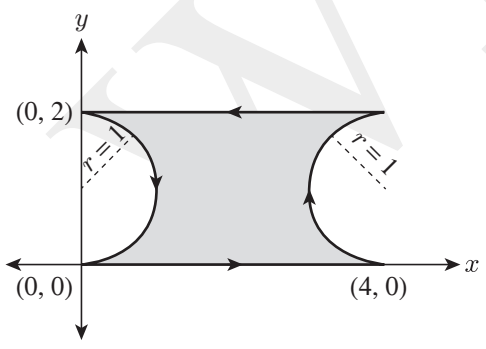

(A) 0 (B) 1
(C) $8 + 2\pi$ (D) -1

Solution: Given that,

$$\vec{F}(x,y) = x\hat{i} + y\hat{j}$$

Now,

$$\oint_C \vec{F}(x,y)(dx\hat{i} + dy\hat{j})$$

$$= \oint_C (x\hat{i} + y\hat{j})(dx\hat{i} + dy\hat{j})$$

$$= \oint_C xdx + ydy$$

Applying Green's theorem, we get

$$\oint_C xdx + ydy = \iint_R \left[\frac{\partial}{\partial x}(y) - \frac{\partial}{\partial y}(x)\right] dxdy$$

$$= \iint_R (0-0)dxdy = 0$$

Ans. (A)

2. Consider a system of linear equations $Ax = b$, where

$$A = \begin{bmatrix} 1 & -\sqrt{2} & 3 \\ -1 & \sqrt{2} & -3 \end{bmatrix}, b = \begin{bmatrix} 1 \\ 3 \end{bmatrix}.$$

This system of equations admits _____.
(A) a unique solution for x
(B) infinitely many solutions for x
(C) no solutions for x
(D) exactly two solutions for x

Solution: Given that,

$$A = \begin{bmatrix} 1 & -\sqrt{2} & 3 \\ -1 & \sqrt{2} & -3 \end{bmatrix} \quad b = \begin{bmatrix} 1 \\ 3 \end{bmatrix} \text{ and } Ax = b$$

So,
$$\begin{bmatrix} 1 & -\sqrt{2} & 3 \\ -1 & \sqrt{2} & -3 \end{bmatrix} \begin{bmatrix} x \\ y \\ z \end{bmatrix} = \begin{bmatrix} 1 \\ 3 \end{bmatrix}$$

$$x - \sqrt{2}y + 3z = 1 \quad (1)$$

$$-x + \sqrt{2}y - 3z = 3$$

$$\Rightarrow x - \sqrt{2}y + 3z = -3 \quad (2)$$

Since both the equations represents parallel lines to each other, therefore this system of equations admits no solution for x.

Ans. (C)

WILEY

3. The current I in the circuit shown is _____.

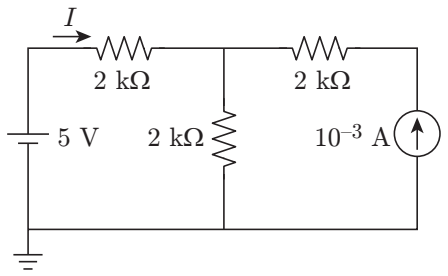

(A) 1.25×10^{-3} A (B) 0.75×10^{-3} A
(C) -0.5×10^{-3} A (D) 1.16×10^{-3} A

Solution: Applying superposition theorem in the given circuit, we have

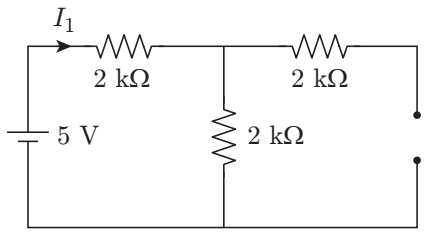

$$I_1 = \frac{5\text{ V}}{(2\times10^3\ \Omega + 2\times10^3\ \Omega)} = 1.25\times10^{-3}\text{A}$$

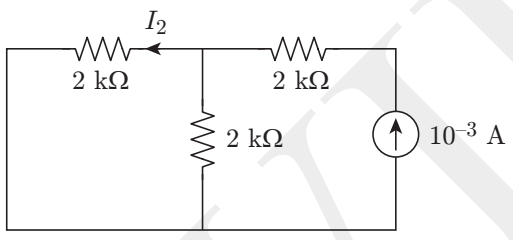

$$I_2 = \frac{2\times10^3\ \Omega}{(2\times10^3\ \Omega + 2\times10^3\ \Omega)}\times10^{-3}\text{ A}$$
$$= 0.5 \times 10^{-3}\text{ A}$$

Hence, the current I in the circuit shown is

$$I = I_1 - I_2 = 1.25\times10^{-3} - 0.5\times10^{-3}$$
$$= 0.75 \times 10^{-3}\text{ A}$$

Ans. (B)

4. Consider the circuit shown in the figure. The current I flowing through the 10 Ω resistor is _____.

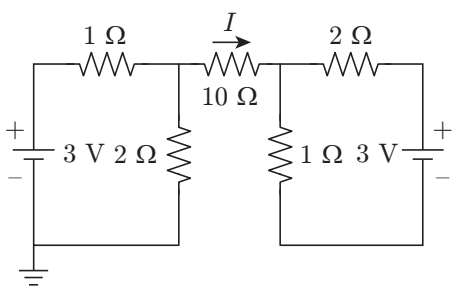

(A) 1 A (B) 0 A
(C) 0.1 A (D) −0.1 A

Solution:

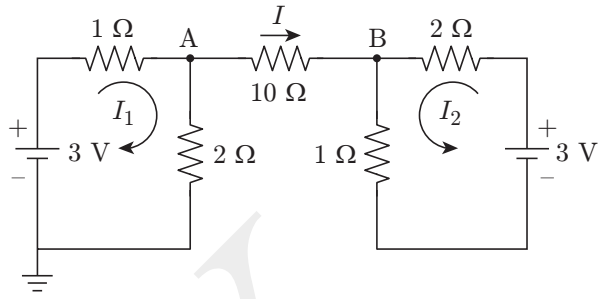

As there is no return path for current I in the circuit. Hence,

$$I = 0\text{ A}$$

Ans. (B)

5. The Fourier transform $X(j\omega)$ of the signal

$$x(t) = \frac{t}{(1+t^2)^2}$$

is _____.

(A) $\frac{\pi}{2j}\omega e^{-|\omega|}$ (B) $\frac{\pi}{2}\omega e^{-|\omega|}$

(C) $\frac{\pi}{2j}e^{-|\omega|}$ (D) $\frac{\pi}{2}e^{-|\omega|}$

Solution: We know that

$$te^{-|t|} \xleftrightarrow{\text{F.T.}} \frac{-4j\omega}{(1+\omega^2)^2}$$

Applying duality property, we get

$$\frac{-4jt}{(1+t^2)^2} \xleftrightarrow{\text{F.T.}} 2\pi(-\omega)e^{-|-\omega|}$$

$$\frac{t}{(1+t^2)^2} \xleftrightarrow{\text{F.T.}} \frac{2\pi}{(-4j)}(-\omega)e^{-|-\omega|} = \frac{2\pi}{2j}\omega e^{-|\omega|}$$

Ans. (A)

6. Consider a long rectangular bar of direct bandgap p-type semiconductor. The equilibrium hole density is 10^{17} cm^{-3} and the intrinsic carrier concentration is 10^{10} cm^{-3}. Electron and hole diffusion lengths are 2 μm and 1 μm, respectively. The left side of the bar ($x = 0$) is uniformly illuminated with a laser having photon energy greater than the bandgap of the semiconductor. Excess electron-hole pairs are generated only at $x = 0$ because of the laser. The steady state electron density at $x = 0$ is 10^{14} cm^{-3} due to laser illumination. Under these conditions and ignoring electric field, the closest approximation (among the given options) of the steady state electron density at $x = 2$ μm, is _____.

WILEY

(A) 0.37×10^{14} cm^{-3} (B) 0.63×10^{13} cm^{-3}
(C) 3.7×10^{14} cm^{-3} (D) 10^3 cm^{-3}

Solution: Given that, $p_0 = 10^{17}$ cm^{-3}, $n_i = 10^{10}$ cm^{-3}, $L_n = 2$ μm and $L_p = 1$ μm.

At equilibrium, the product of the majority and minority carrier concentration is a constant, and the law of mass action is given by

$$n_0 p_0 = n_i^2$$

So, the equilibrium electron density is

$$n_0 = \frac{n_i^2}{p_0} = \frac{10^{20}}{10^{17}} = 10^3 \text{ cm}^{-3}$$

Now,

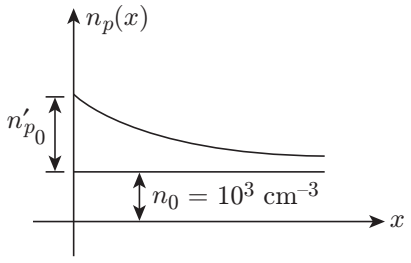

The steady state electron density at $x = 0$ is

$$n_{p_0} = 10^{14} \text{cm}^{-3}$$

The excess electron concentration at any distance x is

$$\delta n_p(x) = n_{p_0} e^{-x/L_n}$$
$$= 10^{14} \times e^{-2\,\mu\text{m}/2\,\mu\text{m}} = 10^{14} \times e^{-1}$$
$$= 0.367 \times 10^{14} \text{ cm}^{-3} = 0.37 \times 10^{14} \text{ cm}^{-3}$$

Ans. (A)

7. In a non-degenerate bulk semiconductor with electron density $n = 10^{16}$ cm^{-3}, the value of $E_C - E_{fn} =$ 200 meV, where E_C and E_{fn} denote the bottom of the conduction band energy and electron Fermi level energy, respectively. Assume thermal voltage as 26 meV and the intrinsic carrier concentration is 10^{10} cm^{-3}. For $n = 0.5 \times 10^{16}$ cm^{-3}, the closest approximation of the value of $(E_C - E_{fn})$, among the given options, is _____.

(A) 226 meV (B) 174 meV
(C) 218 meV (D) 182 meV

Solution: The Fermi level for n-type semiconductor is given by

$$E_C = E_{fn} = kT \ln\left(\frac{N_C}{N_D}\right)$$

where E_C is conduction band energy, E_{Fn} is fermi level, k is Boltzmen's constant, T is the absolute temperature, N_C is number of effective density states in conduction band and N_D is the concentration of donar atoms.

Now,

$$E_C - E_{fn_1} = kT \ln\left(\frac{N_C}{N_{D_1}}\right) \quad (1)$$

$$E_C - E_{fn_2} = kT \ln\left(\frac{N_C}{N_{D_2}}\right) \quad (2)$$

From Eqs. (1) and (2), we get

$$(E_C - E_{fn_1}) - (E_C - E_{fn_2}) = kT \ln\left(\frac{N_{D_2}}{N_{D_1}}\right)$$

$$\Rightarrow 200 \text{ meV} - (E_C - E_{fn_2}) = 26 \text{ meV} \times \ln\left(\frac{0.5 \times 10^3}{1 \times 10^{16}}\right)$$

$$\Rightarrow \quad 200 \text{ meV} - (E_C - E_{fn_2}) = 26 \text{ meV} \times \ln(0.5)$$

$$\Rightarrow \quad E_C - E_{fn_2} = 200 \text{ meV} - (26 \text{ meV} \times \ln(0.5))$$
$$= 200 - (-18) = 218 \text{ meV}$$

Ans. (C)

8. Consider the CMOS circuit shown in the figure (substrates are connected to their respective sources). The gate width (W) to gate length (L) ratios (W/L) of the transistors are as shown. Both the transistors have the same gate oxide capacitance per unit area. For the pMOSFET, the threshold voltage is -1 V and the mobility of holes is 40 cm^2/(V s). For the nMOSFET, the threshold voltage is 1 V and the mobility of electrons is 300 cm^2/(V s). The steady state output voltage V_O is _____.

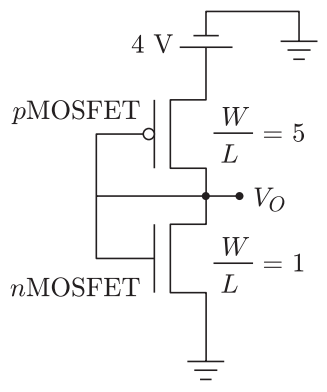

(A) equal to 0 V (B) more than 2 V
(C) less than 2 V (D) equal to 2 V

Solution: From the given figure, we see both the MOSFET are in saturation because drain is shorted to gate terminals. Hence,

$$(I_{\text{DS}})_{n\text{MOSFET}} = (I_{\text{SD}})_{p\text{MOSFET}}$$

$$\Rightarrow \frac{1}{2}\mu_n C_{OX}\left(\frac{W}{L}\right)_n (V_{GS}-V_{TN})^2$$

$$= \frac{1}{2}\mu_p C_{OX}\left(\frac{W}{L}\right)_p (V_{SG}-|V_{TP}|^2)$$

Given, $V_{TN} = |V_{TP}| = 1\text{ V}, (C_{OX})_n = (C_{OX})_p$,

$$\mu_p = 40\text{ cm}^2/(\text{V s}),\ \mu_n = 300\text{ cm}^2/(\text{V s}),$$

$$\left(\frac{W}{L}\right)_n = 1,\ \left(\frac{W}{L}\right)_p = 5\ ,\ V_{GS} = V_O,$$

and $\quad V_{SG} = 4 - V_O$.

Substituting these values in above equation, we get

$$300\times1\times(V_O-1)^2 = 40\times5\times(4-V_O-1)^2$$

$$\Rightarrow \quad 3(V_O{}^2 - 2V_O + 1) = 2(3-V_O)^2$$

$$\Rightarrow \quad 3V_O{}^2 - 6V_O + 3 = 2(9 + V_O{}^2 - 6V_O)$$

$$\Rightarrow \quad V_O{}^2 + 6V_O - 15 = 0$$

$$\Rightarrow \quad V_O = \frac{-6\pm\sqrt{36+4\times15}}{2} = \frac{-6\pm\sqrt{96}}{2}$$

$$\Rightarrow \quad V_O = 1.898\text{ V}, -7.89\text{ V}$$

Ans. (C)

9. Consider the 2-bit multiplexer (MUX) shown in the figure. For OUTPUT to be the XOR of C and D, the values for A_0, A_1, A_2, and A_3 are _____.

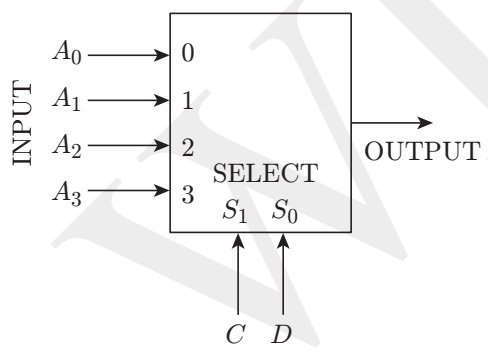

(A) $A_0 = 0,\ A_1 = 0,\ A_2 = 1,\ A_3 = 1$
(B) $A_0 = 1,\ A_1 = 0,\ A_2 = 1,\ A_3 = 0$
(C) $A_0 = 0,\ A_1 = 1,\ A_2 = 1,\ A_3 = 0$
(D) $A_0 = 1,\ A_1 = 1,\ A_2 = 0,\ A_3 = 0$

Solution: The output of 2-bit multiplexer is

$$\text{Output} = \bar{S}_1\bar{S}_0A_0 + \bar{S}_1S_0A_1 + S_1\bar{S}_0A_2 + S_1S_0A_3$$

$$= \bar{C}\bar{D}A_0 + \bar{C}DA_1 + C\bar{D}A_2 + CDA_3$$

The given output of 2-bit multiplexer is

$$\text{output} = C\bar{D} + \bar{C}D$$

On comparing both the equations, we find

$$A_0 = 0,\ A_1 = 1,\ A_2 = 1,\ A_3 = 0$$

Ans. (C)

10. The ideal long channel nMOSFET and pMOSFET devices shown in the circuits have threshold voltages of 1 V and −1 V, respectively. The MOSFET substrates are connected to their respective sources. Ignore leakage currents and assume that the capacitors are initially discharged. For the applied voltages as shown, the steady state voltages are _____.

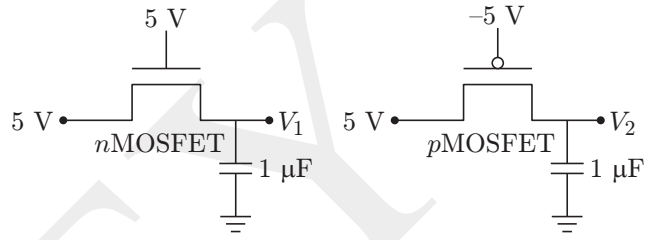

(A) $V_1 = 5$ V, $V_2 = 5$ V
(B) $V_1 = 5$ V, $V_2 = 4$ V
(C) $V_1 = 4$ V, $V_2 = 5$ V
(D) $V_1 = 4$ V, $V_2 = -5$ V

Solution: Given that, $V_{Gn} = 5$ V, $V_{Gp} = -5$ V, $V_{TN} = 1$ V, and $V_{TP} = -1$ V.

The steady state voltage of nMOSFET is

$$V_1 = \min(V_{Gn} - V_{TN}, V_D) = \min(4,5) = 4\text{ V}.$$

For pMOSFET, we have

$$V_{SG} > |V_{TP}|$$

where $V_{SG} = V_2 + 5\text{ V}$ so,

$$V_2 + 5\text{ V} > 1\text{ V}$$

$$\Rightarrow V_2 > -4\text{ V}$$

Since, $\quad V_D > 0$ V

So, the steady state voltage of pMOSFET is

$$V_2 > 4\text{ V} = 5\text{ V}$$

Ans. (C)

11. Consider a closed-loop control system with unity negative feedback and $KG(s)$ in the forward path, where the gain $K = 2$. The complete Nyquist plot of the transfer function $G(s)$ is shown in the figure. Note that the Nyquist contour has been chosen to have the clockwise sense. Assume $G(s)$ has no poles on the closed right-half of the complex plane. The number of poles of the closed-loop transfer function in the closed right-half of the complex plane is _____.

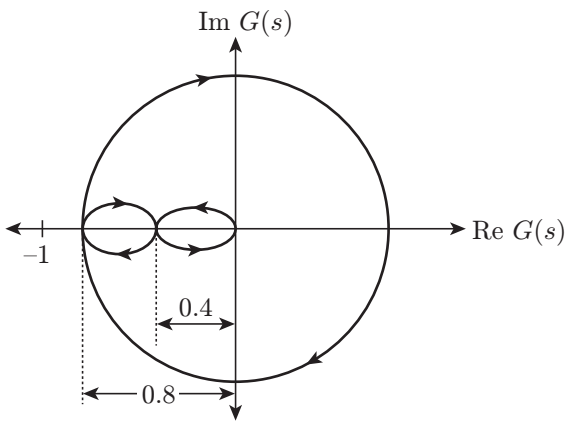

(A) 0 (B) 1
(C) 2 (D) 3

Solution: For $k = 1$, the Nyquist plot will be

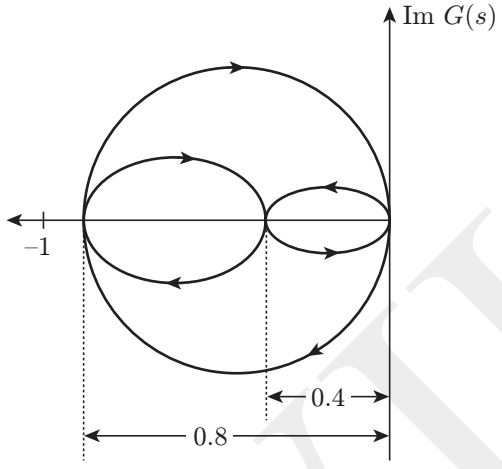

For $k = 2$, the Nyquist plot will be

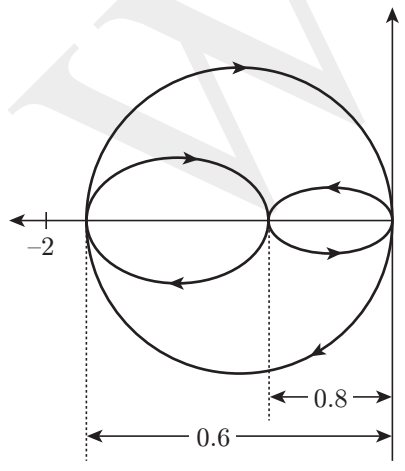

Now, the number of encirclement about $(-1, 0)$ is anticlockwise is

$$N = -2$$

Number of open loop poles, $P = 0$

Hence, the number of poles of the closed-loop transfer function in the closed right-half of the complex plane is

$$Z = P - N = 0 - (-2) = 2$$

Therefore, two poles lie in right half plane.

Ans. (C)

12. The root-locus plot of a closed-loop system with unity negative feedback and transfer function $KG(s)$ in the forward path is shown in the figure. Note that K is varied from 0 to ∞. Select the transfer function $G(s)$ that results in the root-locus plot of the closed-loop system as shown in the figure.

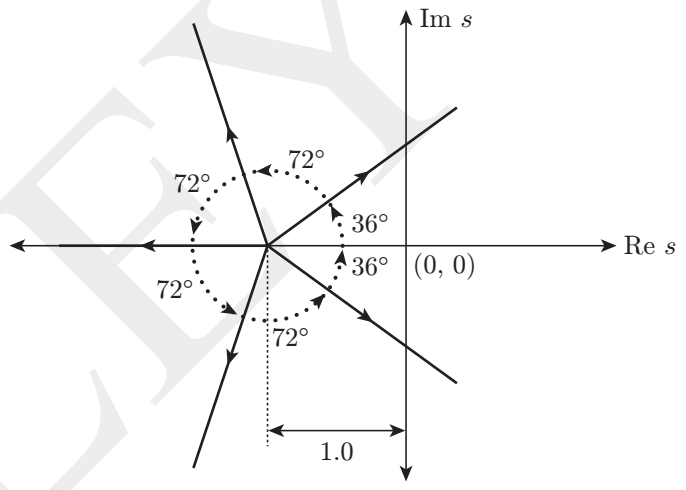

(A) $G(s) = \dfrac{1}{(s+1)^5}$ (B) $G(s) = \dfrac{1}{s^5+1}$

(C) $G(s) = \dfrac{s-1}{(s+1)^6}$ (D) $G(s) = \dfrac{s+1}{s^6+1}$

Solution: There are given root locus branches that are diverging from same point, this can possible only when if we have five poles in the system at the same point. So, there are five real multiple poles. Hence, the correct answer is

$$G(S) = \frac{1}{(s+1)^5}$$

Ans. (A)

13. The frequency response $H(f)$ of a linear time-invariant system has magnitude as shown in the figure.

Statement I: The system is necessarily a pure delay system for inputs which are bandlimited to $-\alpha \le f \le \alpha$.

Statement II: For any wide-sense stationary input process with power spectral density $S_X(f)$, the output power spectral density $S_Y(f)$ obeys $S_Y(f) = S_X(f)$ for $-\alpha \le f \le \alpha$.

WILEY

Which one of the following combinations is true?

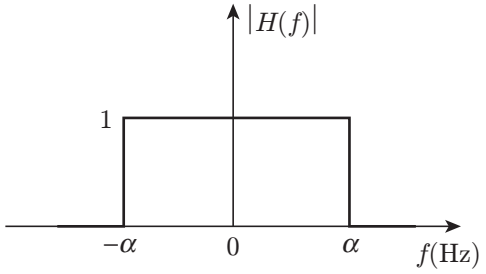

(A) Statement I is correct, Statement II is correct
(B) Statement I is correct, Statement II is incorrect
(C) Statement I is incorrect, Statement II is correct
(D) Statement I is incorrect, Statement II is incorrect

Solution: Taking time response of a linear time-invariant system, the system to be delay system,

$$y(t) = x(t - t_d)$$

$$Y(f) = e^{-j2\pi f t_d} X(f)$$

The frequency response is given by

$$H(f) = \frac{Y(f)}{X(f)} = e^{-j2\pi f t_d}$$

Here given system is constant, hence this is not a delay system. So,

$$H(f) = e^{-0} = 1$$

Now, we know that

$$S_Y(f) = \left|H(f)^2\right| \cdot S_X(f)$$

$$\Rightarrow S_Y(f) = \left|1^2\right| \cdot S_X(f)$$

$$\Rightarrow S_Y(f) = S_X(f)$$

Hence, the statement I is incorrect, and statement II is correct.

Ans. (C)

14. In a circuit, there is a series connection of an ideal resistor and an ideal capacitor. The conduction current (in Amperes) through the resistor is $2\sin(t + \pi/2)$. The displacement current (in Amperes) through the capacitor is _____.

(A) $2\sin(t)$ (B) $2\sin(t + \pi)$
(C) $2\sin(t + \pi/2)$ (D) 0

Solution: Displacement current through the capacitor is given by

$$I_D = A\varepsilon \frac{dE}{dt}$$

When two or more elements are connected in series, then the current remains same through each element. So,

$$I_D = 2\sin\left(t + \frac{\pi}{2}\right)$$

Ans. (C)

15. Consider the following partial differential equation (PDE)

$$a\frac{\partial^2 f(x,y)}{\partial x^2} + b\frac{\partial^2 f(x,y)}{\partial y^2} = f(x,y)$$

where a and b are distinct positive real numbers. Select the combination(s) of values of the real parameters ξ and η such that $f(x,y) = e^{(\xi x + \eta y)}$ is a solution of the given PDE.

(A) $\xi = \frac{1}{\sqrt{2a}}, \eta = \frac{1}{\sqrt{2b}}$ (B) $\xi = \frac{1}{\sqrt{a}}, \eta = 0$
(C) $\xi = 0, \eta = 0$ (D) $\xi = \frac{1}{\sqrt{a}}, \eta = \frac{1}{\sqrt{b}}$

Solution: Given that $f(x,y) = e^{(\xi x + \eta y)}$ is a solution of partial differential equation.

$$a\frac{\partial^2 f(x,y)}{\partial x^2} + b\frac{\partial^2 f(x,y)}{\partial y^2} = f(x,y)$$

Now,

$$f(x,y) = e^{(\xi x + \eta y)}$$

Differentiating $f(x, y)$ two times with respect to x:

$$\frac{\partial f(x,y)}{\partial x} = \xi e^{(\xi x + \eta y)}$$

$$\frac{\partial^2 f(x,y)}{\partial x^2} = \xi^2 e^{(\xi x + \eta y)}$$

Similarly, differentiating $f(x, y)$ two times with respect to y:

$$\frac{\partial f(x,y)}{\partial y} = \eta e^{(\xi x + \eta y)}$$

$$\frac{\partial^2 f(x,y)}{\partial y^2} = \eta^2 e^{(\xi x + \eta y)}$$

So,

$$a\frac{\partial^2 f(x,y)}{\partial x^2} + b\frac{\partial^2 f(x,y)}{\partial y^2} = [a\xi^2 e^{(\xi x + \eta y)} + b\eta^2 e^{(\xi x + \eta y)}]$$

$$= (a\xi^2 + b\eta^2)e^{(\xi x + \eta y)} = (a\xi^2 + b\eta^2)f(x,y)$$

Therefore,

$$a\xi^2 + b\eta^2 = 1$$

From options, it is clear that this condition is stratified when

$$\xi = \frac{1}{\sqrt{2a}}, \eta = \frac{1}{\sqrt{2b}} \text{ or } \xi = \frac{1}{\sqrt{a}}, \eta = 0.$$

Ans. (A, B)

16. An ideal OPAMP circuit with a sinusoidal input is shown in the figure. The 3 dB frequency is the frequency at which the magnitude of the voltage gain decreases by 3 dB from the maximum value. Which of the options is/are correct?

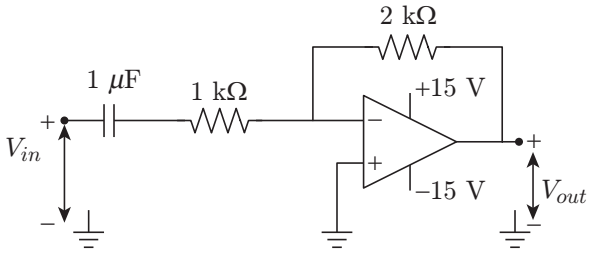

(A) The circuit is a low pass filter.
(B) The circuit is a high pass filter.
(C) The 3 dB frequency is 1000 rad/s.
(D) The 3 dB frequency is $\frac{1000}{3}$ rad/s.

Solution: The given circuit is a high pass filter circuit. The 3 dB frequency is given by

$$\omega_{3\text{dB}} = \frac{1}{R_1C_1} = \frac{1}{(1\times10^3\,\Omega)(1\times10^{-6}\,\text{F})}$$
$$= 10^3 \text{ rad/s} = 1000 \text{ rad/s}.$$

Ans. (B, C)

17. Select the Boolean function(s) equivalent to $x + yz$, where x, y, and z are Boolean variables, and + denotes logical OR operation.
(A) $x + z + xy$ (B) $(x + y)(x + z)$
(C) $x + xy + yz$ (D) $x + xz + xy$

Solution: Consider given options one by one, we have
Option (A): $x + z + xy = x(1 + y) + z = x + z$
Option (B): $(x + y)(x + z) = x + xy + xz + yz$
$= x(1 + y) + xz + yz = x + xz + yz$
$= x(1 + z) + yz = x + yz$
Option (C): $x + xy + yz = x(1 + y) + yz = x + yz$
Option (D): $x + xz + xy = x(1 + z) + xy$
$= x + xy = x(1 + y) = x$

Ans. (B, C)

18. Select the correct statement(s) regarding CMOS implementation of NOT gates.
(A) Noise Margin High (NM_H) is always equal to the Noise Margin Low (NM_L), irrespective of the sizing of transistors.
(B) Dynamic power consumption during switching is zero.
(C) For a logical high input under steady state, the nMOSFET is in the linear regime of operation.
(D) Mobility of electrons never influences the switching speed of the NOT gate.

Solution: Consider given options one by one, we have
Option (A): N_{MH} and N_{ML} will not be always equal because they depend on transition parameters.

$$N_{\text{ML}} = V_{\text{IL}} - V_{\text{OL}}$$
$$N_{\text{MH}} = V_{\text{OH}} - V_{\text{IH}}$$

when $\frac{k_p}{k_n} > 1$, we have $V_{\text{IL}} = \uparrow$, $V_{\text{IH}} = \uparrow$

So, N_{MH} has a lower value and N_{ML} has higher value.

when $\frac{k_p}{k_n} < 1$, we have $V_{\text{IL}} \downarrow$, $V_{\text{IH}} \uparrow$

In this case, N_{MH} value is increasing while N_{ML} value is decreasing.
It means that N_{ML} and N_{MH} depends on transistor sizing and they are equal for certain condition.
Option (B): Dynamic power consumption during switching will not be zero due to capacitive loading of next stage.
Option (C): For logic high input

$$V_{\text{DD}} - |V_{\text{TP}}| \le V_{\text{in}} \le V_{\text{DD}}$$

Hence, PMOS will be cut off and NMOS will operate in linear region.
Option (D): Propagation delay of NOT gate is given by

$$\tau_p = \frac{\tau_{\text{PLH}} + \tau_{\text{PHL}}}{2}$$

where

$$\tau_{\text{PLH}} = \frac{C_L V_{\text{DD}}}{\mu_p C_{\text{OX}}\left(\frac{W}{L}\right)(V_{\text{GS}} - V_{\text{TP}})^2}$$

and

$$\tau_{\text{PHL}} = \frac{C_L V_{\text{DD}}}{\mu_p C_{\text{OX}}\left(\frac{W}{L}\right)(V_{\text{GS}} - V_{\text{TN}})^2}$$

Hence, mobility of electrons influences the switching speed.

Ans. (C)

19. Let $H(X)$ denote the entropy of a discrete random variable X taking K possible distinct real values. Which of the following statements is/are necessarily true?
(A) $H(X) \le \log K$ bits (B) $H(X) \le H(2X)$
(C) $H(X) \le H(X^2)$ (D) $H(X) \le H(2^X)$

WILEY

Solution: If $H(X)$ denotes the entropy of a discrete random variable X taking K possible distinct real values, then the entropy will be maximum for equal probability of K symbols, if $H_{\max} = \log_2 K$. If symbols have different probabilities, then the entropy value will be less than $\log_2 K$.

Hence, $$H(X) \le \log_2 K$$

Option (B): Let $Y = 2X$

X	Y	$P(Y)$
-1	-2	1/4
0	0	1/2
1	2	1/4

$$H(X) = \sum P_X(X_i)\log_2 \frac{1}{P_X(X_i)}$$
$$= \frac{1}{4}\log_2 4 + \frac{1}{2}\log_2 2 + \frac{1}{4}\log_2 4$$
$$= \frac{1}{2} + \frac{1}{2} + \frac{1}{2} = 1.5 \text{ bits/symbol}$$

So,

$$H(2X) = H(Y) = \sum P_Y(Y_i)\log_2 \frac{1}{P_Y(Y_i)}$$
$$= 1.5 \text{ bits/symbol}$$

Option (C): Let $Y = X^2$

X	Y	$P(Y)$
-1	-2	1/4
0	0	1/2
1	2	1/4

and

Y	0	1/2
$P(Y)$	1/2	1/2

So,

$$H(X) = \frac{1}{4}\log_2 4 + \frac{1}{2}\log_2 2 + \frac{1}{4}\log_2 4$$
$$= 1.5 \text{ bits/symbol}$$

and

$$H(X^2) = H(Y) = \sum P_Y(Y_i)\log_2 \frac{1}{P_Y(Y_i)}$$
$$= \frac{1}{2}\log_2 2 + \frac{1}{2}\log_2 2 = 1 \text{ bit/symbol}$$

Option (D): Let $Y = 2^X$

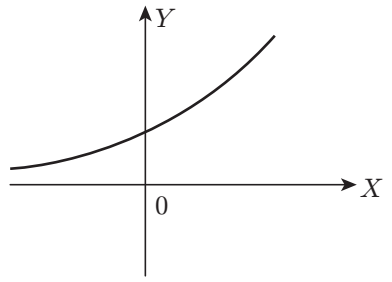

Here, distinct X values results in distinct Y values. So,

$$H(X) = H(Y)$$
$$H(X) = H(2^X)$$

Ans. (A, B, D)

20. Consider the following wave equation,

$$\frac{\partial^2 f(x,t)}{\partial t^2} = 10000\frac{\partial^2 f(x,t)}{\partial x^2}$$

Which of the given options is/are solution(s) to the given wave equation?

(A) $f(x,t) = e^{-(x-100t)^2} + e^{-(x+100t)^2}$

(B) $f(x,t) = e^{-(x-100t)} + 0.5e^{-(x+100t)}$

(C) $f(x,t) = e^{-(x-100t)} + \sin(x+100t)$

(D) $f(x,t) = e^{j100\pi(-100x+t)} + e^{j100\pi(100x+t)}$

Solution: The given wave equation is

$$\frac{\partial^2 f(x,t)}{\partial t^2} = 10000\frac{\partial^2 f(x,t)}{\partial x^2}$$

The standard wave equation is given by

$$\frac{\partial^2 f(x,t)}{\partial t^2} = C^2\frac{\partial^2 f(x,t)}{\partial x^2}$$

Hence, $$C = 100$$

The solution of wave equation has the form of

$$f(x,t) = f(x \pm ct)$$

Hence, the options (A) and (C) stratifies the above solutions

Ans. (A, C)

21. The bar graph shows the frequency of the number of wickets taken in a match by a bowler in her career. For example, in 17 of her matches, the bowler has taken 5 wickets each. The median number of wickets taken by the bowler in a match is _____ (rounded off to one decimal place).

WILEY

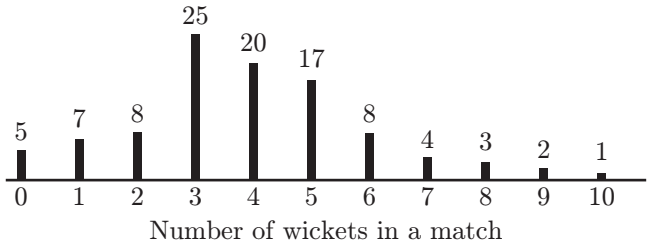

Solution: Total frequency of numbers of wickets is

$$5 + 7 + 8 + 25 + 20 + 17 + 8 + 4 + 3 + 2 + 1$$
$$= 100$$

Now, median median number of wickets is

$$\text{Median} = \frac{\left(\frac{n}{2}\right)\text{th match's wicket} + \left(\frac{n}{2}+1\right)\text{th match's wickets}}{2}$$

$$= \text{Average of the } 50^{\text{th}} \text{ and } 51^{\text{st}} \text{ matches}$$

$$= \frac{4+4}{2} = 4$$

Ans. (4.0)

22. A simple closed path C in the complex plane is shown in the figure. If

$$\oint_C \frac{2^z}{z^2-1}dz = -i\pi A,$$

where $i = \sqrt{-1}$, then the value of A is ____ (rounded off to two decimal places).

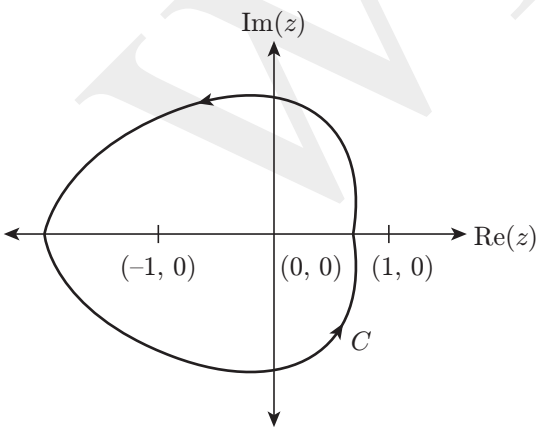

Solution: The poles of function $f(z) = \frac{2^z}{(z^2-1)}dz$ is

$$(z^2 - 1) = 0 \Rightarrow z = \pm 1$$

The given closed path C in the complex plane is

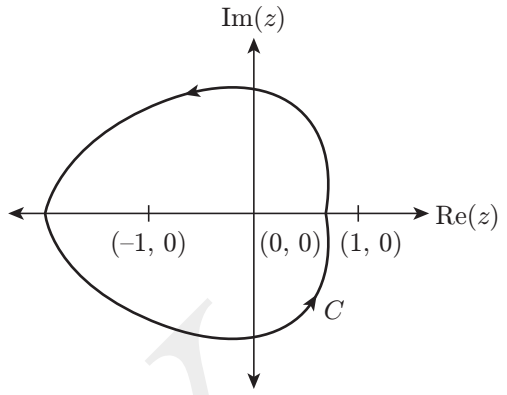

Since, $z = -1$ lies inside the contour, then the residue at $z = -1$ is

$$\text{Residue (at } z = -1) = \lim_{z\to -1}(z+1)\cdot f(z)$$

$$= \lim_{z\to -1}(z+1)\cdot\frac{2^z}{(z+1)(z-1)} = \frac{2^z}{(z-1)} = \frac{-1}{4}$$

Therefore,

$$\oint_C \frac{2^2}{(z^2-1)}dz = 2\pi i \qquad \text{(Residues at } z = -1)$$

$$= 2\pi i\left(\frac{-1}{4}\right) = \frac{-1}{2}\pi i$$

On comparing with with $-i\pi A$, we have

$$A = \frac{1}{2} = 0.50$$

Ans. (0.50)

23. Let $x_1(t) = e^{-t}u(t)$ and $x_2(t) = u(t) - u(t-2)$, where $u(\cdot)$ denotes the unit step function. If $y(t)$ denotes the convolution of $x_1(t)$ and $x_2(t)$, then $\lim_{t\to\infty} y(t) =$ _____ (rounded off to one decimal place).

Solution: $y(t)$ denotes the convolution of $x_1(t)$ and $x_2(t)$, so

$$y(t) = x_1(t) \times x_2(t)$$

Taking Laplace transforms of $y(t)$:

$$Y(s) = X_1(s)X_2(s) \qquad (1)$$

Now,

$$x_1(t) = e^{-t}u(t)$$

$$X_1(s) = \frac{1}{s+a}$$

and $$x_2(t) = u(t) - u(t-2)$$

$$X_2(s) = \frac{1}{s} - \frac{1}{s}e^{-2s} = \left(\frac{1-e^{-2s}}{s}\right)$$

So, $$Y(s) = \frac{1}{(s+a)}\left(\frac{1-e^{-2s}}{s}\right) = \frac{1-e^{-2s}}{s(s+1)}$$

Now,

$$\lim_{t\to\infty} y(t) = \lim_{s\to 0} sy(s) = \lim_{s\to 0} s\cdot\frac{1-e^{-2s}}{s(s+1)}$$

$$= \lim_{s\to 0}\frac{1-e^{-2s}}{(s+1)} = 0$$

Ans. (0)

24. An ideal MOS capacitor (p-type semiconductor) is shown in the figure. The MOS capacitor is under strong inversion with $V_G = 2$ V. The corresponding inversion charge density (Q_{IN}) is 2.2 μC/cm^2. Assume oxide capacitance per unit area as $C_{OX} =$ 1.7 μF/cm^2. For $V_G = 4$ V, the value of Q_{IN} is _____ μC/cm^2 (rounded off to one decimal place).

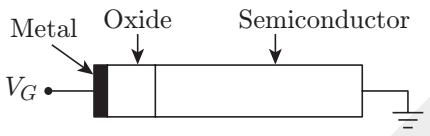

Solution: The inversion charge density of MOS capacitor is

$$Q_{in} = C_{OX}(V_{GS} - V_T)$$

$$\Rightarrow \quad Q_{in} = C_{OX}(V_G - V_T) \quad [\text{Since, } V_S = 0]$$

$$\Rightarrow \quad 2.2\ \mu\text{C/cm}^2 = 1.7\ \mu\text{F/cm}^2\ (2 - V_T)$$

$$\Rightarrow \quad V_T = 2 - \frac{2.2}{1.7} = 0.706 \text{ V}$$

Now, the value of Q_{in} at $V_G = 4$ V is

$$Q_{in} = C_{OX}(V_G - V_T)$$

$$= 1.7 \times 10^{-6}\ (4 - 0.706)$$

$$= 5.5998 = 5.6\ \mu\text{C/cm}^2$$

Ans. (5.6)

25. A symbol stream contains alternate QPSK and 16-QAM symbols. If symbols from this stream are transmitted at the rate of 1 mega-symbols per second, the raw (uncoded) data rate is _____ mega-bits per second (rounded off to one decimal place).

Solution: Given that symbol stream contains alternate QPSK and 16-QAM symbols and the symbols are transmitted at the rate of 1 mega symbols per second.

Now,

$$\text{Bit rate} = (\text{Symbol rate})\cdot\log_2 M$$

For QPSK, we have $n = 2$, $M = 2^n = 4$

$$R_{b_1} = 1\times\log_2 4 = 2 \text{ mbps}$$

For 16 QAM, we have $n = 4$, $m = 2^4 = 16$

$$R_{b_2} = 1\times\log_2 16 = 1\times 4 = 4 \text{ mbps}$$

Therefore, the data rate of uncoded data is

$$R_b = \frac{R_{b_1} + R_{b_2}}{2} = \frac{2+4}{2} = 3 \text{ mbps.}$$

Ans. (3)

Q. No. 26–55 Multiple Choice Question (MCQ) Carry Two Marks Each

26. The function $f(x) = 8\log_e x - x^2 + 3$ attains its minimum over the interval [1, e] at $x =$ _____. (Here $\log_e x$ is the natural logarithm of x.)

(A) 2 (B) 1

(C) e (D) $\frac{1+e}{2}$

Solution: Given function, $f(x) = 8\log_e x - x^2 + 3$ attains its minimum when $x \in [1, e]$

Differentiating with respect to x, we have

$$f'(x) = \frac{8}{x} - 2x$$

For maximum and minimum value,

$$f'(x) = 0 = \frac{8}{x} - 2x$$

$$\Rightarrow \quad \frac{8}{x} - 2x = 0 \Rightarrow 8 - 2x^2 = 0$$

$$\Rightarrow \quad 2x^2 = 8,\ x^2 = 4,\ x = \pm 2$$

Only $x = 2$ lies in the interval [1, e].

Again differentiating with respect to x, we get

$$f''(x) = -\frac{8}{x^2} - 2$$

$$\Rightarrow \quad f''(2) = -\frac{8}{4} - 2 = -4 < 0$$

$$\Rightarrow \quad f''(2) < 0$$

Hence, $f(x)$ is maximum. Now, value of $f(x)$ at $x = 1$ and $x = e$

$$f(1) = 8\log_e 1 - 1 + 3 = 2$$

$$f(e) = 8\log_e e - e^2 + 3 = 8 - e^2 + 3 = 3.61$$

Hence, the minimum value of $f(x)$ occurs at $x = 1$.

Ans. (B)

27. Let α, β be two non-zero real numbers and v_1, v_2 be two non-zero real vectors of size 3×1. Suppose that v_1 and v_2 satisfy $v_1^T v_2 = 0, v_1^T v_1 = 1$, and $v_2^T v_2 = 1$. Let A be the 3×3 matrix given by:

$$A = \alpha v_1 v_1^T + \beta v_2 v_2^T$$

The eigenvalues of A are _____.

(A) $0, \alpha, \beta$ (B) $0, \alpha+\beta, \alpha-\beta$

(C) $0, \dfrac{\alpha+\beta}{2}, \sqrt{\alpha\beta}$ (D) $0, 0, \sqrt{\alpha^2+\beta^2}$

Solution: Given that,

$$A = \alpha v_1 v_1^T + \beta v_2 v_2^T$$

Multiplying both sides by matrix v_1, we get

$$Av_1 = \alpha v_1 v_1^T v_1 + \beta v_2 v_2^T v_1$$
$$= \alpha(1)v_1 + \beta(0) = \alpha v_1$$

Now, multiplying both sides by matrix v_2, we get

$$Av_2 = \alpha v_1 v_1^T v_2 + \beta v_2 v_2^T v_2$$
$$= \alpha(0) + \beta(1)v_2 = \beta v_2$$

Since $v_1 v_1^T$ and $v_2 v_2^T$ both are singular matrices, A is also a singular matrix.

$$|A| = 0 \Rightarrow \lambda_A = 0$$

Hence, $\lambda_A = 0, \alpha, \beta$

Ans. (A)

28. For the circuit shown, the locus of the impedance $Z(j\omega)$ is plotted as ω increases from zero to infinity. The values of R_1 and R_2 are:

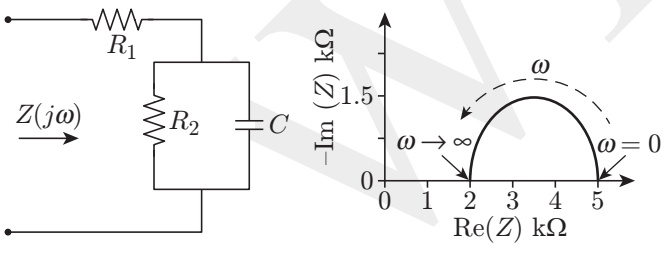

(A) $R_1 = 2$ kΩ, $R_2 = 3$ kΩ
(B) $R_1 = 5$ kΩ, $R_2 = 2$ kΩ
(C) $R_1 = 5$ kΩ, $R_2 = 2.5$ kΩ
(D) $R_1 = 2$ kΩ, $R_2 = 5$ kΩ

Solution: The impedance of the circuit is calculated as

$$Z(j\omega) = R_1 + (R_2 \parallel j\omega C)_1 = R_1 + \frac{R_2 \times j\omega C}{R_2 + 1/j\omega C}$$

$$= R_1 + \frac{R_2}{1 + j\omega R_2 C}$$

Now, at $\omega = 0$, from the locus of impedance, we have

$$Z(j\omega)\big|_{\omega=0} = 4 = R_1 + R_2$$

$$R_1 + R_2 = 4\,\text{k}\Omega \qquad (1)$$

Similarly,

$$Z(j\omega)\big|_{\omega=\infty} = 2 = R_1$$

$$R_1 = 2\,\text{k}\Omega$$

From Eq. (1), we have

$$R_2 = 5 - R_1 = 5 - 2 = 3\,\text{k}\Omega$$

Ans. (A)

29. Consider the circuit shown in the figure with input $V(t)$ in volts. The sinusoidal steady state current $I(t)$ flowing through the circuit is shown graphically (where t is in seconds). The circuit element Z can be _____.

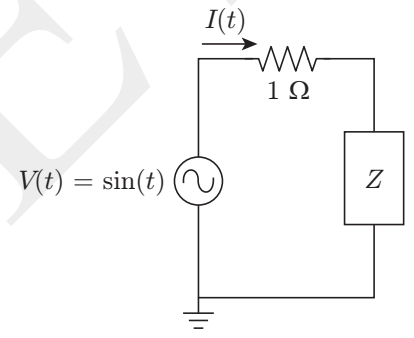

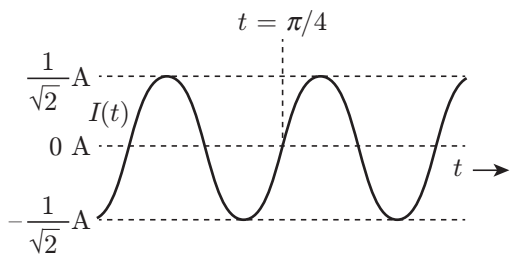

(A) a capacitor of 1 F (B) an inductor of 1 H

(C) a capacitor of $\sqrt{3}$ F (D) an inductor of $\sqrt{3}$ H

Solution: As the current $I(t)$ is lagging, then element Z is an inductor. From the given circuit, we have

$$I(t) = \frac{V(t)}{1+Z} = \frac{V(t)}{Z_0}$$

where $Z_0 = 1 + Z$

Maximum value of current,

$$I_{\max}(t) = \frac{1}{\sqrt{2}}$$

and $$I_{\max}(t) = \frac{V(t)_{\max}}{|Z_0|}$$

So, $$\frac{1}{\sqrt{2}} = \frac{1}{|Z_0|} \Rightarrow |Z_0| = \sqrt{2}$$

Now,

$$Z_0 = R + jX_L = (1 + j\omega L)$$

and $$|Z_0|^2 = \left|\sqrt{1+\omega^2 L^2}\right|^2$$

$$\Rightarrow \quad 2 = 1 + (1^2 \times L^2) \Rightarrow L^2 = 1 \Rightarrow L = 1 \text{ H}$$

Ans. (B)

30. Consider an ideal long channel nMOSFET (enhancement-mode) with gate length 10 μm and width 100 μm. The product of electron mobility (μ_n) and oxide capacitance per unit area (C_{OX}) is $\mu_n C_{OX} = 1$ mA/V^2. The threshold voltage of the transistor is 1 V. For a gate-to-source voltage $V_{GS} = [2 - \sin(2t)]$ V and drain-to-source voltage $V_{DS} = 1$ V (substrate connected to the source), the maximum value of the drain-to-source current is _____.

(A) 40 mA (B) 20 mA
(C) 15 mA (D) 5 mA

Solution: Given that for an ideal long channel nMOSFET:

$$L = 10\ \mu\text{m},\ W = 100\ \mu\text{m},\ \mu_n Co_x = 1\ \text{mA/V}^2,$$

$$V_{TH} = 1\text{ V},\ V_{DS} = 1\text{ V and } V_{GS} = [2 - \sin 2t]\text{ V}.$$

For the value of V_{GS}, we have

$$V_{GS\,\min} = [2 - (\sin 2t)_{\max}]\text{V} = 2 - 1 = 1\text{ V}$$

and

$$V_{GS\,\max} = [2 - (\sin 2t)_{\min}]\text{V} = 2 - (-1) = 3\text{ V}$$

Now, $$V_{DS} < V_{GS} - V_{TH}$$

Hence, the MOSFET is working in linear region. So,

$$I_D = \mu_n C_{OX}\frac{W}{L}\left[(V_{GS} - V_{TH})V_{DS} - \frac{1}{2}V_{DS}^2\right]$$

$$= (1\,\text{mA/V}^2)\left(\frac{100\,\mu\text{m}}{10\,\mu\text{m}}\right)\left[(3-1)1 - \left(\frac{1}{2}\times 1\right)\right]$$

$$= (1\text{ mA/V}^2)(10)(3/2\text{ V}^2) = 15\text{ mA}$$

Ans. (C)

31. For the following circuit with an ideal OPAMP, the difference between the maximum and the minimum values of the capacitor voltage (V_C) is _____.

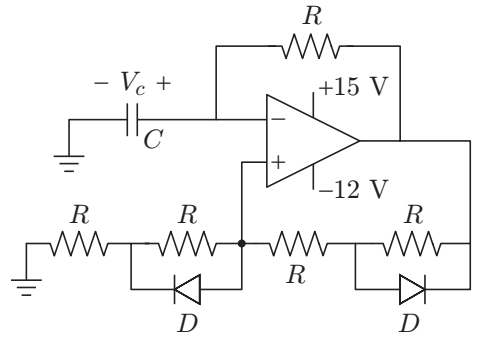

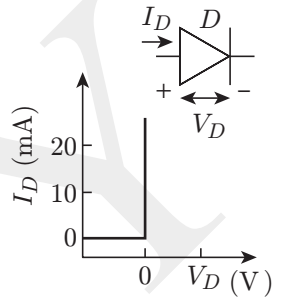

(A) 15 V (B) 27 V
(C) 13 V (D) 14 V

Solution: If output voltage $V_O = 15$ V, then first diode is ON and second diode is OFF.

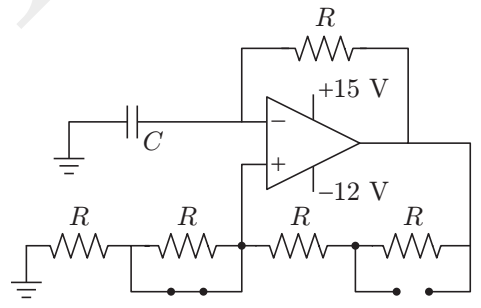

The maximum voltage across capacitor is

$$V_{C,\max} = \frac{15 \times R}{R + 2R} = 5\text{ V}$$

If output voltage $V_O = -12$ V, then first diode is OFF and second diode is ON.

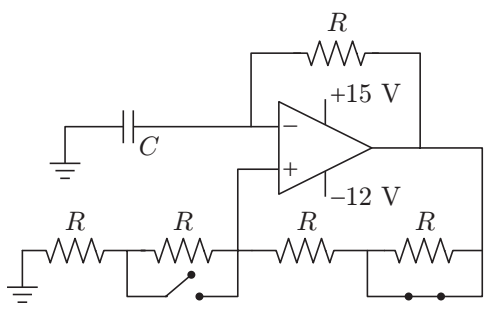

The minimum voltage across capacitor is

$$V_{C,\min} = \frac{-12\times 2R}{2R+R} = \frac{-24R}{3R} = -3\text{ V}$$

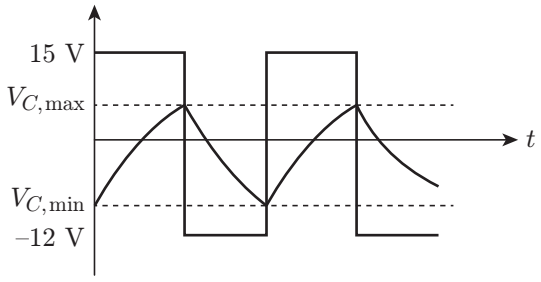

Hence, the difference between the maximum and the minimum values of the capacitor voltage is

$$V_C = V_{C,\max} - V_{C,\min} = 5-(-8) = 13\text{ V}$$

Ans. (C)

32. A circuit with an ideal OPAMP is shown. The Bode plot for the magnitude (in dB) of the gain transfer function ($A_V(j\omega) = V_{\text{out}}(j\omega)/V_{\text{in}}(j\omega)$) of the circuit is also provided (here, ω is the angular frequency in rad/s). The values of R and C are _____.

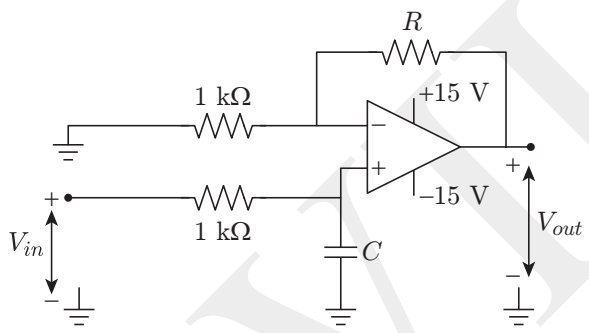

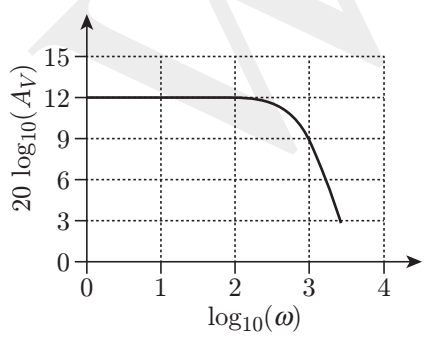

(A) $R = 3$ kΩ, $C = 1$ μF
(B) $R = 1$ kΩ, $C = 3$ μF
(C) $R = 4$ kΩ, $C = 1$ μF
(D) $R = 3$ kΩ, $C = 2$ μF

Solution: The given circuit is an ideal OPAMP. The voltages at the inverting and non-inverting terminals of OPAMP is

$$V^+ = \frac{1/j\omega C}{(1\times 10^3)+1/j\omega C}V_{\text{in}} = \frac{1}{1+j\omega(1\times 10^3)C}V_{\text{in}} \quad (1)$$

$$V^- = \frac{1\times 10^3}{(1\times 10^3)+R}V_{\text{out}} \quad (2)$$

From Eqs. (1) and (2), we have

$$\frac{1}{1+j\omega(1\times 10^3)C}V_{\text{in}} = \frac{1\times 10^3}{(1\times 10^3)+R}V_{\text{out}}$$

$$\Rightarrow \quad \frac{V_{\text{out}}}{V_{\text{in}}} = \frac{(1\times 10^3)+R}{1\times 10^3[1+j\omega(1\times 10^3)C]}$$

where $\dfrac{V_{\text{out}}}{V_{\text{in}}} = |A_V|$

$$|A_V| = \frac{(1+R)^2\times 10^6}{\sqrt{10^6+\omega^2C^2}}$$

Since, resistance are given in kΩ so let C be in μF. Now, gain decreases by 3 dB from 12 to 9.

Hence, $\log_{10}(\omega_C) = 3$ is a 3-dB frequency.

Now,

$$20\log_{10} A_{\max} = 12$$

$$\Rightarrow \quad A_{\max} \simeq 4$$

So, $\left(1+\dfrac{R}{1\times 10^3}\right) = 4 \Rightarrow R = (4-1)\times 1\times 10^3 = 3\text{ k}\Omega$

and $\quad \log_{10}\omega_C = 3 \Rightarrow \omega_C = 10^3$ rad/s

We know that, $\omega = \dfrac{1}{RC}$

$$\omega_C = \frac{1}{1\times 10^3\times C} \Rightarrow C = 1\times 10^{-6}\text{ F} = 1\ \mu\text{F}$$

Ans. (A)

33. For the circuit shown, the clock frequency is f_0 and the duty cycle is 25%. For the signal at the Q output of the Flip-Flop, _____.

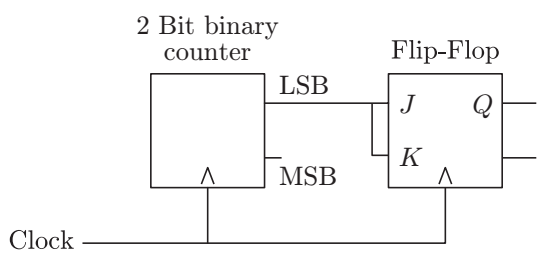

(A) frequency is $f_0/4$ and duty cycle is 50%
(B) frequency is $f_0/4$ and duty cycle is 25%
(C) frequency is $f_0/2$ and duty cycle is 50%
(D) frequency is f_0 and duty cycle is 25%

Solution: The output of 2-bit countor is

M_{SB}	L_{SB}	$(J, K)_{input}$
0	0	0
0	1	1
1	0	0
1	1	1

The output waveforms are shown in below figures:

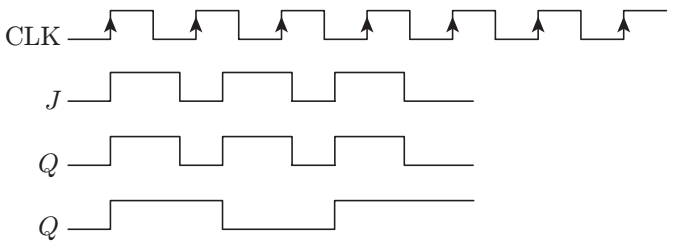

For JK Flip-flop, 00 will not change the state. Hence,

$$\text{Duty cycle} = 50\%$$

$$\text{Output frequency} = f_0/4$$

Ans. (A)

34. Consider an even polynomial $p(s)$ given by

$$p(s) = s^4 + 5s^2 + 4 + K,$$

where K is an unknown real parameter. The complete range of K for which $p(s)$ has all its roots on the imaginary axis is _____.

(A) $-4 \le K \le \frac{9}{4}$ (B) $-3 \le K \le \frac{9}{2}$

(C) $-6 \le K \le \frac{5}{4}$ (D) $-5 \le K \le 0$

Solution: The even polynomial $p(s)$ is given by

$$p(s) = s^4 + 5s^2 + 4 + K$$

By applying Routh-Hurwitz criteria, we get

s^4	1	5	$(4 + K)$
s^3	0	0	
s^2			
s^1			
s^0			

The auxiliary equation is

$$A(s) = s^4 + 5s^2 + (4 + K)$$

$$\frac{dA(s)}{ds} = 4s^3 + 10s$$

Now,

s^4	1	5	$(4 + K)$
s^3	4	10	0
s^2	$\frac{5}{2}$	$(4 + K)$	
s^1	$\frac{25 - 4(4 + K)}{5/2}$		
s^0	$(4 + K)$		

Hence,

$$(4 + K) > 0 \Rightarrow K > -4$$

$$\Rightarrow \quad \frac{25 - 4(4 + K)}{5/2} > 0$$

$$\Rightarrow \quad 25 - 16 - 4K > 0 \Rightarrow 9 - 4K > 0$$

$$\Rightarrow \quad K < \frac{9}{4}$$

Hence, the complete range of K for which $p(s)$ has all its roots on the imaginary axis is

$$-4 \le k \le \frac{9}{4}.$$

Ans. (A)

35. Consider the following series:

$$\sum_{n=1}^{\infty} \frac{n^d}{c^n}$$

For which of the following combinations of c, d values does this series converge?

(A) $c = 1, d = -1$ (B) $c = 2, d = 1$

(C) $c = 0.5, d = -10$ (D) $c = 1, d = -2$

Solution: The given series is

$$S_n = \sum_{n=1}^{\infty} \frac{n^d}{c^n}$$

Considering the options one by one, we get

(A) $c = 1, d = -1$

$$S_n = \sum \frac{n^{-1}}{1^n} = \sum \frac{1}{n}$$

Hence, series is divergent by p-test.

(B) $c = 2, d = 1 \Rightarrow S_n = \sum \frac{n}{2^n}$

Applying Ratio's test

$$\lim_{n\to\infty} \frac{S_n + 1}{S_n} = \lim_{n\to\infty} \frac{n+1}{2^n + 1} \cdot \frac{2^n}{n} = \frac{1}{2} < 2$$

Hence, the series is convergent.

(C) $c = 0.5$, $d = -10$

Applying Ratio test again, we get

$$\lim_{n\to\infty} \frac{S_n + 1}{S_n} = \lim_{n\to\infty} \frac{(n+1)^{-10}}{(0.5)^{n+1}} \cdot \frac{(0.5)^n}{n^{10}}$$

$$= 1/0.5 = 2 > 1$$

Hence, the series is divergent.

(D) $c = 1$, $d = -2$

$$S_n = \sum \frac{(n)^{-2}}{(1)^n} = \sum \frac{1}{n^2}$$

Hence, series is convergent by p-test.

Ans. (B, D)

36. The outputs of four systems (S_1, S_2, S_3, and S_4) corresponding to the input signal $\sin(t)$, for all time t, are shown in the figure. Based on the given information, which of the four systems is/are definitely **not** LTI (linear and time-invariant)?

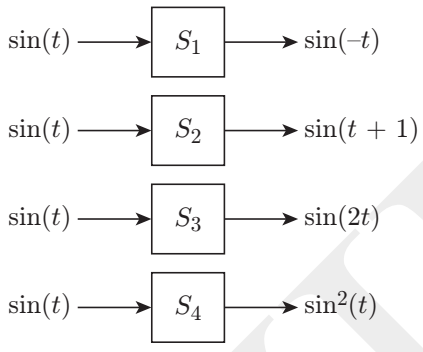

(A) S_1 (B) S_2
(C) S_3 (D) S_4

Solution: The given systems are

$$\sin(t) ----\boxed{S_1}---- \sin(-t) = -\sin t$$

$$\sin(t) ----\boxed{S_2}---- \sin(t+1)$$

$$\sin(t) ----\boxed{S_3}---- \sin(2t)$$

$$\sin(t) ----\boxed{S_4}---- \sin^2(t) = \frac{1-\cos(2t)}{2}$$

Since systems S_3 and S_4 have different input and output sinusoidal frequencies and LTI system does not change the frequency of sinusoidal input. Hence, S_3 and S_4 are definitely LTI systems.

Ans. (C, D)

37. Select the **correct** statement(s) regarding semiconductor devices.

(A) Electrons and holes are of equal density in an intrinsic semiconductor at equilibrium.

(B) Collector region is generally more heavily doped than Base region in a BJT.

(C) Total current is spatially constant in a two terminal electronic device in dark under steady state condition.

(D) Mobility of electrons always increases with temperature in Silicon beyond 300 K.

Solution: Option (A) At equilibrium in intrinsic semiconductor

$$n = p = n_i$$

Hence, option (A) is correct.

Option (B) In Bipolar junction transitor, the collector region is lightly doped than the base region.

Hence, option (B) is incorrect.

Option (C) Total current is spatially constant in a two terminal electronic device, while individual currents vary spatially under dark and steady state condition.

Hence, option (C) is also correct.

Option (D) By increasing temperature above 300 k (27°C), the mobility of electrons start decreasing.

Hence, option (D) is incorrect.

Ans. (A, C)

38. A state transition diagram with states A, B, and C, and transition probabilities p_1, p_2, … , p_7 is shown in the figure (e.g., p_1 denotes the probability of transition from state A to B). For this state diagram, select the statement(s) which is/are universally true.

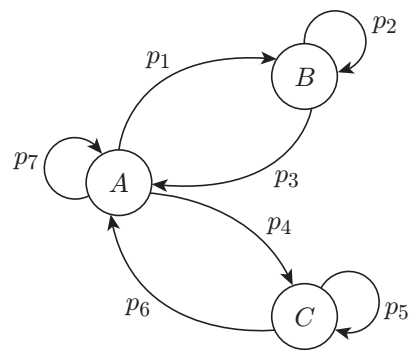

(A) $p_2 + p_3 = p_5 + p_6$ (B) $p_1 + p_3 = p_4 + p_6$
(C) $p_1 + p_4 + p_7 = 1$ (D) $p_2 + p_5 + p_7 = 1$

Solution: Considering the state transition diagram:

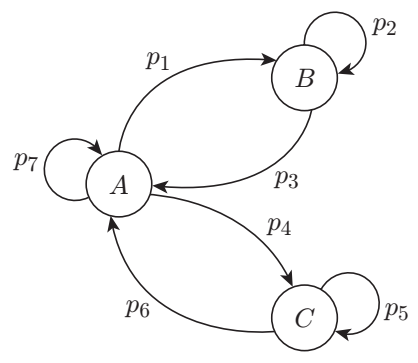

From above transition diagram, we have

$$P_1 + P_4 + P_7 = 1$$

$$P_2 + P_3 = 1$$

and $$P_5 + P_6 = 1$$

From above equations, we get

$$P_2 + P_3 = P_5 + P_6$$

Hence, the statements (A) and (C) are universally true.

Ans. (A, C)

39. Consider a Boolean gate (D) where the output Y is related to the inputs A and B as, $Y = A + \bar{B}$, where + denotes logical OR operation. The Boolean inputs '0' and '1' are also available separately. Using instances of only D gates and inputs '0' and '1', _____ (select the correct option(s)).

(A) NAND logic can be implemented
(B) OR logic cannot be implemented
(C) NOR logic can be implemented
(D) AND logic cannot be implemented

Solution: Let $f(A, B) = Y = A + \bar{B}$

As 0 and 1 are available separately, then 0 select $A = 0$, we get

$$f(0, B) = 0 + \bar{B} = \bar{B} \qquad \text{(NOT Gate)}$$

Now, $$f(A, B) = A + \bar{B}$$

$$f(A, \bar{B}) = A + \bar{\bar{B}} = A + B \Rightarrow \text{OR GATE}$$

$$f(0, f(A, \bar{B})) = 0 + (\overline{A + B}) \Rightarrow \text{NOR GATE}$$

$$f(\bar{A}, B) = \bar{A} + \bar{B} = \overline{A \cdot B} \Rightarrow \text{NAND GATE}$$

Ans. (A, C)

40. Two linear time-invariant systems with transfer functions

$$G_1(s) = \frac{10}{s^2 + s + 1} \text{ and } G_2(s) = \frac{10}{s^2 + s\sqrt{10} + 10}$$

have unit step responses $y_1(t)$ and $y_2(t)$, respectively. Which of the following statements is/are true?

(A) $y_1(t)$ and $y_2(t)$ have the same percentage peak overshoot.
(B) $y_1(t)$ and $y_2(t)$ have the same steady-state value.
(C) $y_1(t)$ and $y_2(t)$ have the same damped frequency of oscillation.
(D) $y_1(t)$ and $y_2(t)$ have the same 2% settling time.

Solution: The given second order transfer functions are

$$G_1(s) = \frac{10}{s^2 + s + 1}$$

$$G_2(s) = \frac{10}{s^2 + s\sqrt{10} + 10}$$

On comparing with standard equations of second order system

$$G(s) = \frac{\omega_n^2}{s^2 + 2\xi\omega_n s + \omega_n^2},$$

For $\omega_{n_1}^2 = 1 \Rightarrow \omega_{n_1} = 1, 2\xi_1\omega_{n_1} = 1, \xi_1 = \frac{1}{2}$

For $\omega_{n_2}^2 = 10 \Rightarrow \omega_{n_2} = \sqrt{10}, 2\xi_2\omega_{n_2} = \sqrt{10}, \xi_2 = \frac{1}{2}$

Since peak-overshoot, M_P value depends only damping factor ξ, hence both $y_1(t)$ and $y_2(t)$ have the same percent peak overshoot.

So, the steady state errors are

$$e_{ss_1} = \lim_{s \to 0} \left(\frac{1}{s}\right) \cdot s \cdot \frac{10}{s^2 + s + 1} = 10$$

$$e_{ss_2} = \lim_{s \to 0} (s) \left(\frac{1}{s}\right) \cdot \frac{10}{s^2 + \sqrt{10}s + 10} = \frac{10}{10} = 1.$$

Hence, $$e_{ss_1} \neq e_{ss_2}$$

The damping frequency of second order system is given by

$$\omega_d = \omega_n \sqrt{1 - \xi^2}$$

Since, $\omega_{n_1} \neq \omega_{n_2}$ and $\xi_1 = \xi_2$, hence both $y_1(t)$ and $y_2(t)$ have different damped frequency of oscillations. The settling time is given by

$$t_s = \frac{4}{\xi}\omega_n$$

Here, $\xi_1 = \xi_2$ and $\omega_{n_1} \neq \omega_{n_2}$, so settling time for both $y_1(t)$ and $y_2(t)$ are different.

Ans. (A)

41. Consider an FM broadcast that employs the pre-emphasis filter with frequency response

$$H_{\text{pe}}(\omega) = 1 + \frac{j\omega}{\omega_0}$$

where $\omega_0 = 10^4$ rad/s.

For the network shown in the figure to act as a corresponding de-emphasis filter, the appropriate pair(s) of (R, C) values is/are _____.

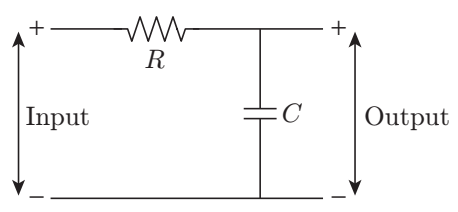

(A) $R = 1\ \text{k}\Omega$, $C = 0.1\ \mu\text{F}$
(B) $R = 2\ \text{k}\Omega$, $C = 1\ \mu\text{F}$
(C) $R = 1\ \text{k}\Omega$, $C = 2\ \mu\text{F}$
(D) $R = 2\ \text{k}\Omega$, $C = 0.5\ \mu\text{F}$

Solution: The frequency response of pre-emphasis filter is

$$H_{pe}(\omega) = 1 + j\frac{\omega}{\omega_0}$$

The de-emphasis filter for FM broadcast is

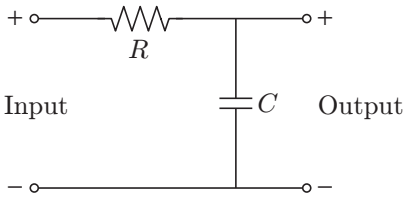

$$H_{De}(\omega) = \frac{1/j\omega C}{R + 1/j\omega C} = \frac{1}{1 + j\omega RC}$$

Relationship between pre-emphasis and De-emphasis systems is

$$\left|H_{pe}(\omega)\right| = \frac{1}{\left|H_{De}(\omega)\right|}$$

$$\Rightarrow \quad \sqrt{1 + \left(\frac{\omega}{\omega_0}\right)^2} = \frac{1}{1/\sqrt{1 + (\omega RC)^2}}$$

$$\Rightarrow \quad \sqrt{1 + \left(\frac{\omega}{\omega_0}\right)^2} = \sqrt{1 + (\omega RC)^2}$$

Taking square of both sides, we get

$$1 + \left(\frac{\omega}{\omega_0}\right)^2 = 1 + (\omega RC)^2$$

$$\Rightarrow \quad \frac{\omega^2}{\omega_0^2} = \omega^2 R^2 C^2$$

$$\Rightarrow \quad \omega_0^2 = \frac{1}{R^2C^2} \Rightarrow \omega_0 = \frac{1}{RC}$$

Given that $\omega_0 = 10^4\,\text{rad/s}$, so

$$RC = \frac{1}{10^4}$$

It is clear from options that only option (A) satisfies the required condition.

Ans. (A)

42. A waveguide consists of two infinite parallel plates (perfect conductors) at a separation of 10^{-4} cm, with air as the dielectric. Assume the speed of light in air to be 3×10^8 m/s. The frequency/frequencies of TM waves which can propagate in this waveguide is/are _____.

(A) 6×10^{15} Hz
(B) 0.5×10^{12} Hz
(C) 8×10^{14} Hz
(D) 1×10^{13} Hz

Solution: Given that, $a = 10^{-4}$ cm, $c = 3 \times 10^8$ m/s.
For TM mode, $m = 1$.
The cut-off frequency for waveguide is

$$f_C = \frac{mc}{2a}$$

$$f_C = \frac{3 \times 10^8}{2 \times 10^{-4} \times 10^{-2}} = 1.5 \times 10^{14}\,\text{Hz}$$

So, the frequencies above the cut-off frequency will only propagate. Hence, options (A) and (C) are correct options.

Ans. (A, C)

43. The value of the integral

$$\iint_D 3(x^2 + y^2)\,dx\,dy,$$

where D is the shaded triangular region shown in the diagram, is _____ (rounded off to the nearest integer).

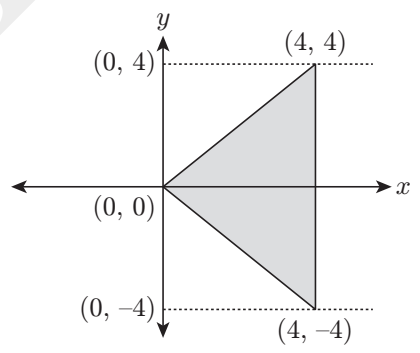

Solution: Let

$$I = \iint_D 3(x^2 + y^2)\,dx\,dy$$

where D is the shaded triangular region shown below

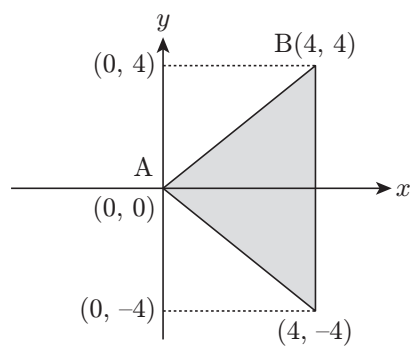

The slope of line AB is

$$m = \frac{4-0}{4-0} = 1$$

The equation of line AB is

$$y - 0 = m(x - 0)$$

$$\Rightarrow \qquad y = 1 \times x \Rightarrow y = x$$

Now,

$$I = \int_0^4 \int_{-x}^{x} (3x^2 + 3y^2)dydx$$

$$= \int_0^4 [3x^2y + y^3]_{-x}^{x} dx$$

$$= \int_0^4 [6x^3 + 2x^3]dx = \int_0^4 8x^3 dx$$

$$= 8\int_0^4 x^3 dx = 8\left[\frac{x^4}{4}\right]_0^4$$

$$= 8 \times \frac{1}{4} \times (4)^4 = 2 \times 256 = 512$$

Ans. (512)

44. A linear 2-port network is shown in Fig. (a). An ideal DC voltage source of 10 V is connected across Port 1. A variable resistance R is connected across Port 2. As R is varied, the measured voltage and current at Port 2 is shown in Fig. (b) as a V_2 versus $-I_2$ plot. Note that for $V_2 = 5$ V, $I_2 = 0$ mA, and for $V_2 = 4$ V, $I_2 = -4$ mA. When the variable resistance R at Port 2 is replaced by the load shown in Fig. (c), the current I_2 is _____ mA (rounded off to one decimal place).

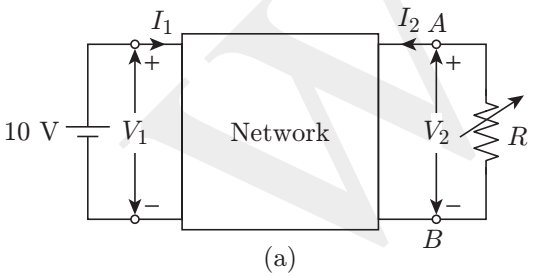

(a)

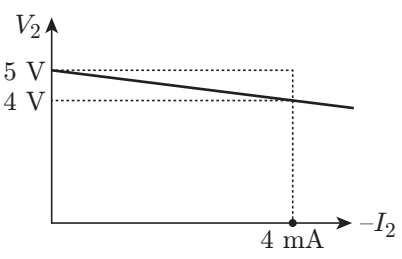

(b)

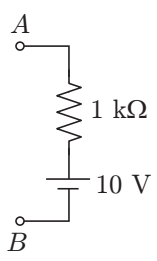

(c)

Solution: For $I_2 = 0$, means the output port (2) is open-circuited. So,

$$V_2 = V_{OC} = 5\,\text{V}$$

For Thevenin's resistance, R_{th}

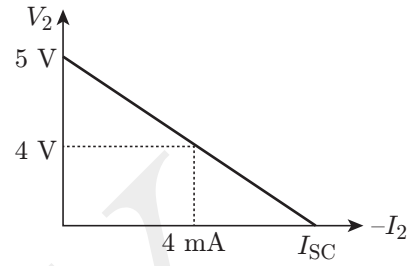

with the help of linearity, we get

$$\frac{5-0}{4-0} = \frac{I_{SC} - 0}{I_{SC} - 4}$$

$$\Rightarrow \qquad 5I_{SC} - 20 = 4I_{SC}$$

$$\Rightarrow \qquad I_{SC} = 20 \text{ mA}$$

So, Thevenin's resistance

$$R_{Th} = \frac{V_{OC}}{I_{SC}} = \frac{5}{20 \text{ mA}} = 0.25 \text{ k}\Omega = 250\ \Omega$$

Now, replacing the circuit by Thevenin's equivalent circuit is

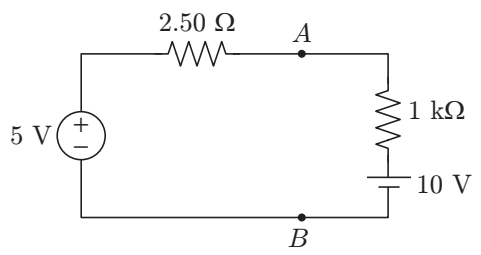

$$I_2 = \frac{(10-5)\,\text{V}}{(1+.25)\,\text{k}\Omega} = \frac{5}{1.25}\text{mA} = 4 \text{ mA}$$

Ans. (4)

45. For a vector $\bar{x} = [x[0], x[1], \ldots, x[7]]$, the 8-point discrete Fourier transform (DFT) is denoted by $\bar{X} = \text{DFT}(\bar{x}) = [X[0], X[1], \ldots X[7]]$, where

$$X[k] = \sum_{n=0}^{7} x[n] \exp\left(-j\frac{2\pi}{8}nk\right).$$

Here, $j = \sqrt{-1}$. If $\bar{x} = [1, 0, 0, 0, 2, 0, 0, 0]$ and $\bar{y} = \text{DFT}(\text{DFT}(\bar{x}))$, then the value of $y[0]$ is _____ (rounded off to one decimal place).

WILEY

Solution: Given that,

$$y(k) = \sum_{n=0}^{7} x[n]e^{-j\frac{2\pi nk}{8}}$$

Using duality property, we get

$$x[n] \xrightarrow{\text{DFT}} Nx[-k] = y(n)$$

$$y(n) = Nx[-k] = Nx(N-k)$$

$$y(n) = 8(1, 0, 0, 0, 2, 0, 0, 0)$$

$$= (8, 0, 0, 0, 16, 0, 0, 0)$$

At $x = 0$, $y(0) = 8$.

Ans. (8)

46. A p-type semiconductor with zero electric field is under illumination (low level injection) in steady state condition. Excess minority carrier density is zero at $x = \pm 2l_n$, where $l_n = 10^{-4}$ cm is the diffusion length of electrons. Assume electronic charge, $q = -1.6 \times 10^{-19}$ C. The profiles of photo-generation rate of carriers and the recombination rate of excess minority carriers (R) are shown. Under these conditions, the magnitude of the current density due to the photo-generated electrons at $x = +2l_n$ is _____ mA/cm^2 (rounded off to two decimal places).

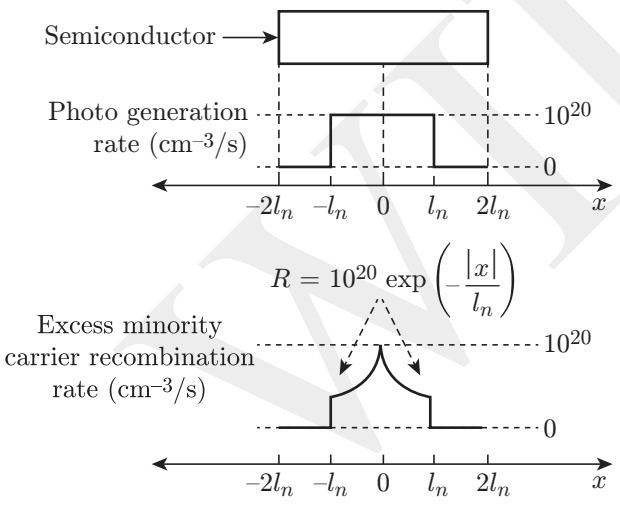

Solution: Given that,

$$\delta_n(x) = R\tau_n = 10^{20} e^{-|x|/l_n} \cdot \tau_n$$

$$\delta_n(l_n) = 10^{20} e^{-1} \tau_n \qquad (1)$$

For $l_n \le x \le 2l_n$, continuity equation is given by

$$D_n \frac{\partial^2 f_n}{\partial^2 x^2} + G - R = 0 \qquad (2)$$

Since $G = 0$ and $R = 0$ for $l_n \le x \le 2l_n$, So

$$D_n \frac{\partial^2 \delta_n}{\delta x^2} = 0 \qquad (3)$$

Now, the solution of Eq. (3) is

$$\delta_n(x) = Ax + B$$

At $x = 2l_n$, $\quad \delta_n(2l_n) = 0$

$$0 = A(2l_n) + B$$

$$A = \frac{-B}{2l_n} x + B = B\left(1 - \frac{x}{2l_n}\right) \qquad (4)$$

At $x = l_n$, we have

$$10^{20} e^{-1} \tau_n = B\left[1 - \frac{l_n}{2l_n}\right]$$

$$\Rightarrow \qquad B = 2 \times 10^{20} e^{-1} \tau_n$$

Therefore, $\quad \delta_n(x) = 2 \times 10^{20} e^{-1} \tau_n \left[1 - \frac{x}{2\, l_n}\right]$

Electronic diffusion current density is

$$|J_n|_{\text{diff}} = qD_n \frac{dn}{dx}$$

$$= qD_n \times 2 \times 10^{20} \times e^{-1} \times \tau_n \left(0 - \frac{1}{2\, l_n}\right)$$

$$= \frac{1.6 \times 10^{-19} \times \ln^2 \times 2 \times 10^{20} \times e^{-1}}{2 \ln}$$

$$= 1.6 \times 10^{-19} \times \ln \times 10^{20} \times e^{-1}$$

$$= 16 \times 1 \times 10^{-4} \times e^{-1}$$

$$= 0.588 \text{ mA/cm}^2 = 0.59 \text{ mA/cm}^2$$

Ans. (0.59)

47. A circuit and the characteristics of the diode (D) in it are shown. The ratio of the minimum to the maximum small signal voltage gain $\partial V_{\text{out}}/\partial V_{\text{in}}$ is _____ (rounded off to two decimal places).

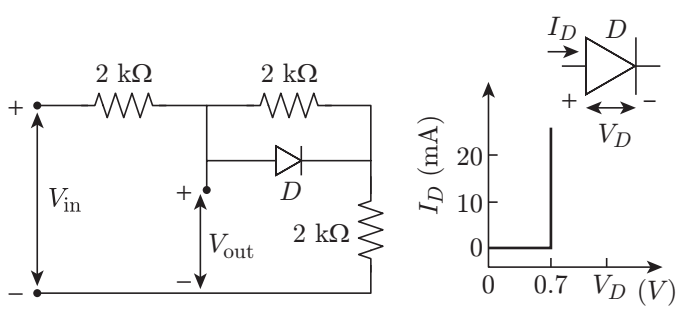

WILEY

Solution: When the diode is OFF, then

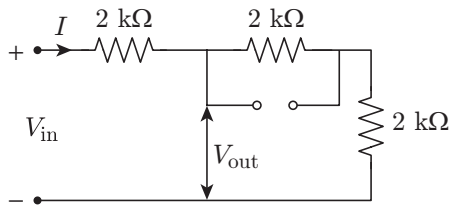

From figure, we have

$$V_{out} = 4I,\ V_{in} = 6I$$

So, $$A_V = \frac{V_{out}}{V_{in}} = \frac{4I}{6I} = \frac{2}{3}$$

When diode is ON, the voltage drop cross diode is 0.7 V. Therefore

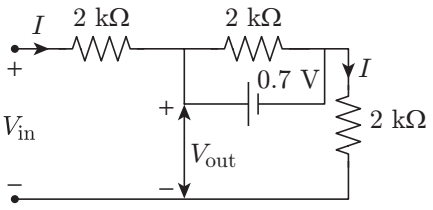

From figure, we have

$$V_{out} = 0.7 + (2\,\text{k}\Omega)\times I,\ V_{in} = 0.7 + (4\text{k}\Omega)I$$

$$\Rightarrow \quad V_{in} = 0.7 + (4\,\text{k}\Omega)\times\frac{(V_{out} - 0.7)}{2\,\text{k}\Omega}$$

$$\Rightarrow \quad V_{in} = 0.7 + 2V_{out} - 1.4$$

$$\Rightarrow \quad V_{out} = \frac{V_{in} + 0.7}{2}$$

So, $$A_V = \frac{\partial V_{out}}{\partial V_{in}} = \frac{1}{2}$$

So, maximum gain voltage = 2/3 and minimum voltage gain

$$\frac{(\partial V_{out}/\partial V_{in})_{min}}{(\partial V_{out}/\partial V_{in})_{max}} = \frac{1}{2}\times\frac{3}{2} = \frac{3}{4} = 0.75$$

Ans. (0.75)

48. Consider the circuit shown with an ideal OPAMP. The output voltage V_{out} is _____V (rounded off to two decimal places).

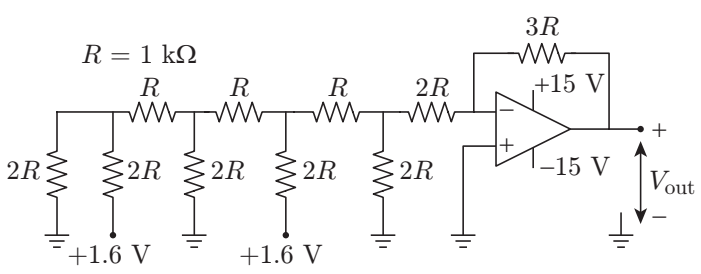

Solution: The output voltage of DAC is
Analog output, V_{out} = –Resolution × gain × Decimal representation of binary data
and R_{in} = ([([([(2R || 2R) + R] || 2R) + R] ||2R) + R]||2R) + 2R = 3R
where,

Resolution $= \dfrac{V_{R_{Th}}}{2^n}$, Gain $= \dfrac{R_f}{R_{in}} = \dfrac{3R}{3R} = 1$ and

Decimal of the given binary = $(0101)_2 = (5)_{10}$

$$V_{out} = -\frac{1.6}{2^4}\times 1\times 5 = -0.5\text{ V}$$

Ans. (–0.5)

49. Consider the circuit shown with an ideal long channel nMOSFET (enhancement mode, substrate is connected to the source). The transistor is appropriately biased in the saturation region with V_{GG} and V_{DD} such that it acts as a linear amplifier. v_i is the small-signal ac input voltage. v_A and v_B represent the small-signal voltages at the nodes A and B, respectively. The value of v_A/v_B is _____ (rounded off to one decimal place).

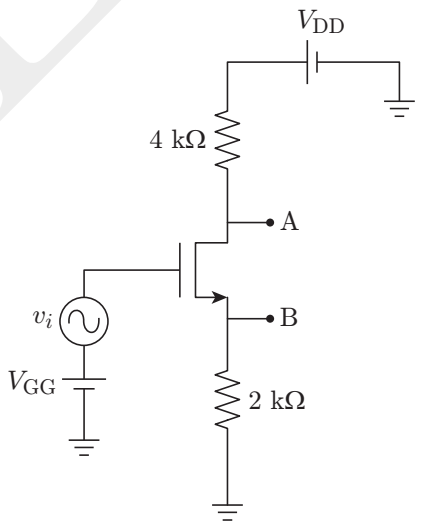

Solution: For AC analysis, we have the following modified circuit:

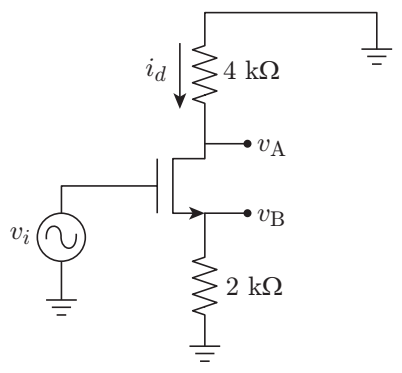

Now, voltages at points A and B are

$$v_A = -i_d(4\,\text{k}\Omega) = -4\times10^3\times i_d$$

$$v_B = i_d(2\,\text{k}\Omega) = 2\times10^3\times i_d$$

Hence, $$\frac{v_A}{v_B} = \frac{-4\times10^3\times i_d}{2\times10^3\times i_d} = -2$$

Ans. (-2)

50. The block diagram of a closed-loop control system is shown in the figure. $R(s)$, $Y(s)$, and $D(s)$ are the Laplace transforms of the time-domain signals $r(t)$, $y(t)$, and $d(t)$, respectively. Let the error signal be defined as $e(t) = r(t) - y(t)$. Assuming the reference input $r(t) = 0$ for all t, the steady-state error $e(\infty)$, due to a unit step disturbance $d(t)$, is _____ (rounded off to two decimal places).

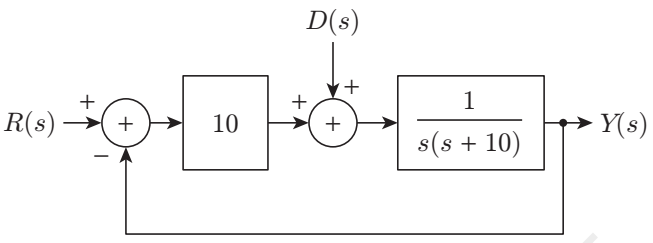

Solution: The given block diagram of closed loop control system is

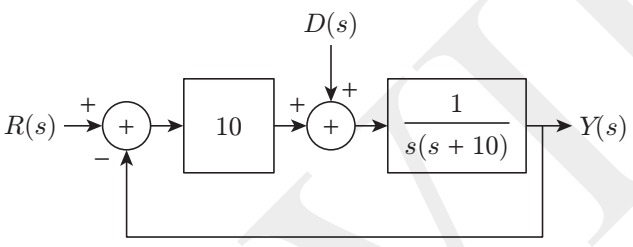

Assuming $r(t) = 0$, we have

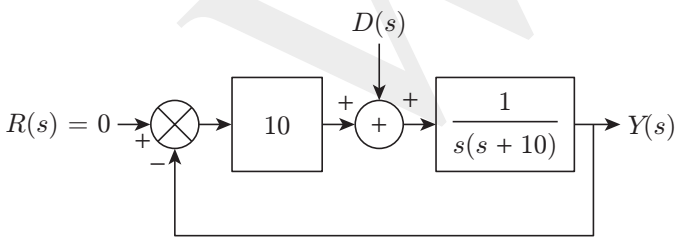

The output input ratio is given by

$$\frac{Y(s)}{D(s)} = \frac{1/s(s+10)}{1+\dfrac{10}{s(s+10)}} = \frac{1}{s^2+10s+10}$$

Since $d(t)$ is unit step disturbance, then $D(s) = 1/s$

$$Y(s) = \frac{1}{s}\cdot\frac{1}{(s^2+10s+10)} = \frac{1}{s(s^2+10s+10)}$$

Now, $$E(s) = \frac{1}{s(s^2+10s+10)}$$

Therefore, the steady-state error is

$$\underset{(\text{at } t=\infty)}{e_{ss}} = \lim_{s\to0} sE(s)$$

$$e(\infty) = \lim_{s\to0} s\times\left[\frac{-10}{s(s^2+10s+10)}\right] = \frac{-1}{10} = -0.1$$

Ans. (-0.1)

51. The transition diagram of a discrete memoryless channel with three input symbols and three output symbols is shown in the figure. The transition probabilities are as marked. The parameter α lies in the interval [0.25, 1]. The value of α for which the capacity of this channel is maximized, is _____ (rounded off to two decimal places).

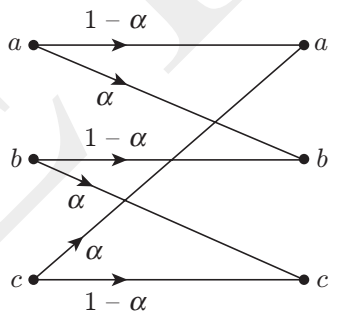

Solution: The given transition diagram of a discrete memoryless channel is

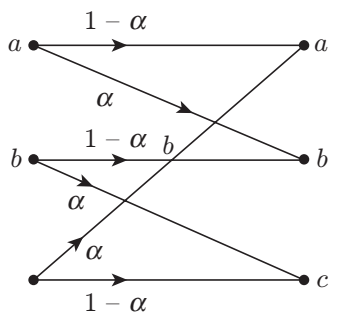

The mutual information of the channel is

$$I(x:y) = H(Y) - H(Y/X)$$

where $$H\left(\frac{Y}{X}\right) = -\sum_{i=1}^{3}\sum_{j=1}^{3} p(x_i, y_i)\log_2 p\left(\frac{y_j}{x_i}\right)$$

$$p\left(\frac{y_i}{x_i}\right) = \begin{array}{c} \\ x_1 \\ x_2 \\ x_3 \end{array}\begin{array}{c} \begin{array}{ccc} y_1 & y_2 & y_3 \end{array} \\ \begin{bmatrix} 1-\alpha & \alpha & 0 \\ 0 & 1-\alpha & \alpha \\ \alpha & 0 & 1-\alpha \end{bmatrix} \end{array}$$

For simple convenience, Let $p(x) = [1\ 0\ 0]$

$$P[X,Y] = [P(x_d)] \cdot \left[P\left(\frac{y}{x}\right)\right]$$

$$= \begin{bmatrix} 1-\alpha & \alpha & 0 \\ 0 & 0 & 0 \\ 0 & 0 & 0 \end{bmatrix}$$

Now,

$$H\left(\frac{Y}{X}\right) = -\{(1-\alpha)\log_2(1-\alpha) + \alpha \log_2 \alpha\}$$

$$I(x:y) = H(Y) + (1-\alpha)\log_2(1-\alpha) + \log_2 \alpha$$

The channel capacity is given by

$$C_S = \max\{I(X:Y)\}$$

$$= \max\{H(Y) + (I-\alpha)\log_2(1-\alpha) + \alpha \log_2 \alpha\}$$

$$C_S = \log_2 3 + \underbrace{(1-\alpha)\log_2(1-\alpha) + \alpha \log_2 \alpha}$$

By drawing the plot of $(1-\alpha)\log_2(1-\alpha) + \alpha \log_2 \alpha$, we get

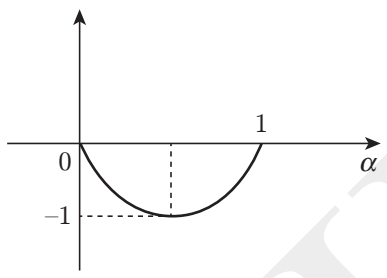

So, C_S will be maximum at $\alpha = 1$. Given that $\alpha \in [0,25,1]$, so the c_s will be maximum at $\alpha = 1$.

Ans. (1)

52. Consider communication over a memoryless binary symmetric channel using a (7, 4) Hamming code. Each transmitted bit is received correctly with probability $(1-\varepsilon)$, and flipped with probability ε. For each codeword transmission, the receiver performs minimum Hamming distance decoding, and correctly decodes the message bits if and only if the channel introduces at most one bit error. For $\varepsilon = 0.1$, the probability that a transmitted codeword is decoded correctly is _____ (rounded off to two decimal places).

Solution: For a (7, 4) Hamming code; the number of transmitted bits in a code word = 7

Due to binary symmetrical channel

$$p(0/1) = p(1/0) = 0.1$$

When n bits are transmitted, then probability of getting error in r bits $= {}^nC_r p^r (1-p)^{n-r}$.

Now the probability of correct decoding of codeword is equal to the probability of at most one bit error in the codeword since the receive decodes the message bits correctly if and only if the channel introduces at most one bit error.

Let the p_c be the probability of no error or 1 bit error in the codeword, so

$$p_c = {}^7C_0(0.1)^0(1-0.1)^{7-0} + {}^7C_1(0.1)^1(1-0.1)^{7-1}$$

$$= 7 \times (0.9)^7 + (7 \times (0.1) \times (0.9)^6)$$

$$= 0.8543 = 0.85$$

Ans. (0.85)

53. Consider a channel over which either symbol x_A or symbol x_B is transmitted. Let the output of the channel Y be the input to a maximum likelihood (ML) detector at the receiver. The conditional probability density functions for Y given x_A and x_B are:

$$f_{Y|x_A}(y) = e^{-(y+1)}u(y+1),$$

$$f_{Y|x_B}(y) = e^{(y-1)}(1-u(y-1)),$$

where $u(\cdot)$ is the standard unit step function. The probability of symbol error for this system is _____ (rounded off to two decimal places).

Solution: The conditional probability density functions for y given x_A and x_B are:

$$f_{Y|x_A}(y) = e^{-(y+1)}u(y+1),$$

$$f_{Y|x_B}(y) = e^{(y-1)}(1-u(y-1)),$$

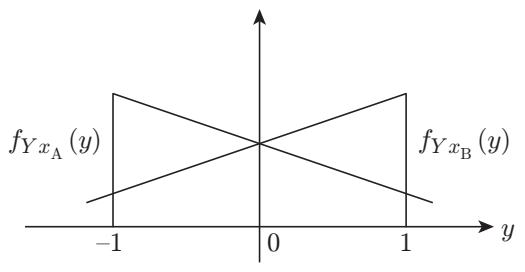

ML decoding is

$$f_{Y|x_A}(y) \underset{<x_B}{\overset{>x_A}{}} f_{Y|x_B}(y)$$

that means, $f_{Y|x_A}(y) > f_{Y|x_B}(y) \rightarrow$ Decision in favour of x_A

$f_{Y|x_A}(y) < f_{Y|x_B}(y) \rightarrow$ Decision in favour of x_B

For $-1 < y < -1$ and $1 < y < \infty \rightarrow f_{Y|x_A}(y) > f_{Y|x_B}(y)$

For above internal decision in favour of x_A.

For $-\infty < y < -1$

and $0 < y < 1 \rightarrow f_{Y|x_B}(y) > f_{Y|x_A}(y)$

For above internal decision in favour of x_B.

Hence, the probability of symbol error is

$$P_e = P(x_A)\cdot P_{e\,x_A} + P(x_B)\cdot P_{e\,x_B}$$

where $P_{e\,x_A}$ and $P_{e\,x_B}$ are the probability of errors x_A transmitted and x_B transmitted respectively.

$$P_{e\,x_A} = \int_0^1 f_{Y|x_A}(y)dy = \int_0^1 e^{-(y+1)}u(y+1)dy$$

$$= \int_0^1 e^{-(y+1)}dy = e^{-1} - e^{-2} = 0.23$$

$$P_{e\,x_B} = \int_{-1}^0 f_{Y|x_B}(y)\,dy = \int_{-1}^0 e^{(y-1)}[1-u(y-1)]dy$$

$$= \int_{-1}^0 e^{y-1}dy = e^{-1} - e^{-2} = 0.23$$

Hence, $P_e = P(x_A)\times 0.23 + P(x_B)\times 0.23$

$$= 0.23[P(x_A) + P(x_B)]$$

Ans. (0.23)

54. Consider a real valued source whose samples are independent and identically distributed random variables with the probability density function, $f(x)$, as shown in the figure.

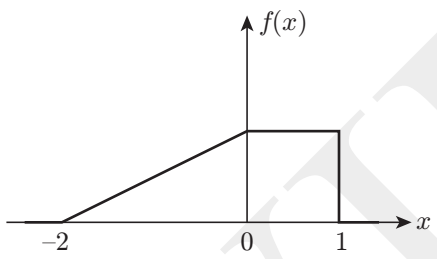

Consider a 1 bit quantizer that maps positive samples to value α and others to value β. If α^* and β^* are the respective choices for α and β that minimize the mean square quantization error, then $(\alpha^* - \beta^*)$ = _____ (rounded off to two decimal places).

Solution: Given figure can be redraw with some insertions

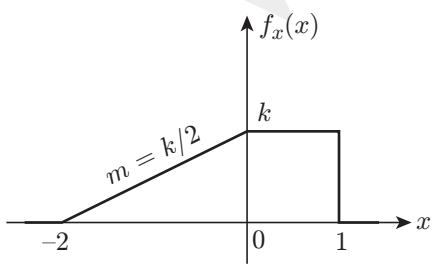

Area under the graph is

$$A = \left(\frac{1}{2}\times k\times 2\right) + (1\times k)$$

We know that total probability is equal to 1. So,

$$\left(\frac{1}{2}\times k\times 2\right) + (1\times k) = 1 \Rightarrow k = \frac{1}{2} = 0.5$$

General equation of line is

$$f_x(x) = mx + C$$

For $(-2 \le x \le 0)$, we have

$$f_x(x) = 0.25x + C$$

When $x = -2$, $f_x(x) = 0.25\times(-2) + C = 0$

$$\Rightarrow \qquad C = 0.50$$

For $(-2 \le x \le 0)$, we have

$$f_x(x) = \frac{1}{4}x + \frac{1}{2}$$

where $f_x(x) = 0.5, 0 \le x \le 1$

Quantizer output:

$$x_q = \alpha, \qquad \text{for } 0 \le x \le 1$$

$$x_q = \beta, \qquad \text{for } 0 - 2 \le x \le 0$$

Mean square quantization error is,

$$\text{MSQ}[Q_e] = E[(x - x_q)^2]$$

Quantization noise power,

$$N_0 = \text{MSQ}[Q_e] = \int (x - x_q)^2 f_x(x)dx$$

For $-2 \le x \le 0$, we have

$$N_Q = \int_{-2}^0 (x-\beta)^2 \times \left(\frac{1}{4}x + \frac{1}{2}\right)dx$$

$$= \int_{-2}^0 (x^2 + \beta^2 - 2x\beta)\left(\frac{x}{4} + \frac{1}{2}\right)dx$$

$$= \frac{\beta^2}{2} + \frac{2}{3}\beta - \frac{1}{3}$$

To find β value for which N_Q will be minimum we have

$$\frac{dN_Q}{d\beta} = 0 \Rightarrow \frac{1}{2}\times 2\beta + \frac{2}{3} = 0$$

$$\Rightarrow \qquad \beta = \frac{-2}{3}$$

For $0 \le x \le 1$, we have

$$N_Q = \int_0^1 (x-\alpha)^2 \times \frac{1}{2}dx$$

$$= \frac{-1}{2}\int_0^1 (x-\alpha)^2 dx$$

$$= \frac{1}{6}[(1-\alpha)^3 + \alpha^3]$$

To find α value for which N_Q is minimum, we have

$$\frac{dN_Q}{d\alpha} = 0 \Rightarrow \frac{1}{6}[3(1-\alpha)^2(t-1) + 3\alpha^2) = 0$$

$$\Rightarrow \quad [3(1-\alpha)^2(-1) + 3\alpha^2] = 0 \Rightarrow \alpha = \frac{1}{2}$$

Choose α^* and β^* for which mean quantization error (N_Q) is minimum will be 1/2 and −2/3 respectively

$$\alpha^* - \beta^* = \frac{1}{2} + \frac{2}{3}$$

$$= \frac{3+4}{6} = \frac{7}{6} = 1.167$$

Ans. (1.167)

55. In an electrostatic field, the electric displacement density vector, $\vec{D}$, is given by

$$\vec{D}(x,y,z) = (x^3\hat{i} + y^3\hat{j} + xy^2\hat{k})\ \text{C/m}^2,$$

where $\hat{i}, \hat{j}, \hat{k}$ are the unit vectors along x-axis, y-axis, and z-axis, respectively. Consider a cubical region R centered at the origin with each side of length 1 m, and vertices at (±0.5 m, ±0.5 m, ±0.5 m). The electric charge enclosed within R is _____ C (rounded off to two decimal places).

Solution: The electric displacement density vector, $\vec{D}$, is given by

$$\vec{D}(x, y, z) = (x^3\hat{i} + y^3\hat{j} + xy^2\hat{k})\ \text{C/m}^2$$

The electric charge enclosed within cubical region R is

$$Q_{\text{enclosed}} = \int_V \rho_V dV = \int (\nabla \cdot D) dV$$

$$\nabla \cdot D = \frac{\partial}{\partial x}(x^3) + \frac{\partial}{\partial y}(y^3) + \frac{\partial}{\partial z}(xy^2)$$

$$= 3x^2 + 3y^2 + 0 = 3(x^2 + y^2)$$

and $\qquad dV = dx\ dy\ dz$

Therefore,

$$Q_{\text{enclosed}} = \int_V 3(x^2 + y^2) dx\ dy\ dz$$

$$= 3\int_{x=-0.5}^{0.5}\int_{y=0.5}^{0.5}\int_{z=0.5}^{0.5}(x^2 + y^2) dx\ dy\ dz$$

$$= 3\int_{x=-0.5}^{0.5}\int_{y=-0.5}^{0.5}(x^2 + y^2) dx\ dy [z]_{-0.5}^{0.5}$$

$$= 3\int_{x=-0.5}^{0.5}\int_{y=-0.5}^{0.5}(x^2 + y^2) dx\ dy \times 1$$

$$= 3\int_{x=-0.5}^{0.5}\left[x^2 y + \frac{y^3}{3}\right]_{-0.5}^{0.5} dy$$

$$= 3\int_{x=-0.5}^{0.5}\left(x^2 + \frac{0.25}{3}\right) dx$$

$$= 3\left[\frac{x^3}{3} + \frac{0.25}{3}x\right]_{-0.5}^{0.5} = 0.25 + 0.25 = 0.50\ \text{C}$$

Ans. (0.50)

WILEY