SOLVED GATE
(MECHANICAL ENGINEERING SET-I) 2022

Engineering Mathematics and Technical Section

Q. No. 1–25 Multiple Choice Question (MCQ)
Carry One Mark Each

1. The limit

$$p = \lim_{x \to \pi} \left(\frac{x^2 + \alpha x + 2\pi^2}{x - \pi + 2\sin x} \right)$$

has a finite value for a real α. The value of α and the corresponding limit p are
(A) $\alpha = -3\pi$, and $p = \pi$
(B) $\alpha = -2\pi$, and $p = 2\pi$
(C) $\alpha = \pi$, and $p = \pi$
(D) $\alpha = 2\pi$, and $p = 3\pi$

Solution: The denominator becomes 0 for $x = \pi$, therefore the value of constant α can be calculated by equating the numerator with zero,

$$x^2 + \alpha x + 2\pi^2 = 0$$
$$\pi^2 + \alpha\pi + 2\pi^2 = 0$$
$$\alpha = -3\pi$$

Applying L'Hospital rule on the given limit as,

$$p = \lim_{x \to p} \left(\frac{\frac{d}{dx}(x^2 + \alpha x + 2\pi^2)}{\frac{d}{dx}(x - \pi + 2\sin x)} \right)$$
$$p = \lim_{x \to p} \left(\frac{2x + \alpha}{1 + 2\cos x} \right)$$
$$p = \lim_{x \to p} \left(\frac{2\pi - 3\pi}{1 + 2\cos \pi} \right)$$
$$p = \pi$$

Ans. (A)

2. Solution of $\nabla^2 T = 0$ in a square domain ($0 < x < 1$ and $0 < y < 1$) with boundary conditions:

$$T(x, 0) = x;\ T(0, y) = y;$$
$$T(x, 1) = 1 + x;\ T(1, y) = 1 + y$$

is
(A) $T(x, y) = x - xy + y$
(B) $T(x, y) = x + y$
(C) $T(x, y) = -x + y$
(D) $T(x, y) = x + xy + y$

Solution: Given that,

$$T(x, 0) = x;\ T(0, y) = y;$$
$$T(x, 1) = 1 + x;\ T(1, y) = 1 + y$$

This question can be solved by checking the options,
Option (A)

$$T(x, y) = x - xy + y$$
$$T(x, 0) = x$$
$$T(0, y) = y$$
$$\left.\begin{aligned} T(x, 1) &= y \\ T(1, y) &= x \end{aligned}\right\} \text{Not satisfied}$$

Option (B)

$$T(x, y) = x + y$$
$$T(x, 0) = x$$
$$T(0, y) = y$$
$$\left.\begin{aligned} T(x, 1) &= x + 1 \\ T(1, y) &= 1 + y \end{aligned}\right\} \text{satisfied}$$

Ans. (B)

3. Given a function $\phi = \frac{1}{2}(x^2 + y^2 + z^2)$ in three-dimensional Cartesian space, the value of the surface integral

$$\oiint_S \hat{n} \cdot \nabla\phi \, dS,$$

where S is the surface of a sphere of unit radius and $\hat{n}$ is the outward unit normal vector on S, is
(A) 4π
(B) 3π
(C) $\frac{4\pi}{3}$
(D) 0

WILEY

Solution: The divergence of the given function will be,

$$\nabla\phi = \frac{\partial\phi}{\partial x}\hat{i} + \frac{\partial\phi}{\partial y}\hat{j} + \frac{\partial\phi}{\partial z}\hat{k}$$
$$= \frac{\partial}{\partial x}\frac{1}{2}(x^2+y^2+z^2)\hat{i} + \frac{\partial}{\partial y}\frac{1}{2}(x^2+y^2+z^2)\hat{j}$$
$$+ \frac{\partial}{\partial z}\frac{1}{2}(x^2+y^2+z^2)\hat{k}$$
$$= x\hat{i} + y\hat{j} + z\hat{k}$$

Applying the Gauss integral theorem to calculate the surface integral,

$$\oiint_S \hat{n}\cdot\nabla\phi ds = \iiint_V \nabla\cdot(\nabla\phi)dV$$
$$= \iiint_V \left(\frac{\partial}{\partial x}\hat{i} + \frac{\partial}{\partial y}\hat{j} + \frac{\partial}{\partial z}\hat{k}\right)\cdot(x\hat{i}+y\hat{j}+z\hat{k})dV$$
$$= \iiint_V (1+1+1)dV = 3\iiint_V dV$$
$$= 3\left(\frac{4}{3}\pi(1)^3\right) = 4\pi$$

Ans. (A)

4. The Fourier series expansion of x^3 in the interval $-1 \le x < 1$ with periodic continuation has
(A) only sine terms
(B) only cosine terms
(C) both sine and cosine terms
(D) only sine terms and a non-zero constant

Solution: The given function is,

$$y = x^3$$

Check for odd function:

$$y = (-x)^3 = -x^3$$

Hence, the above function is odd function, therefore it will only contains sine terms in the expansion.

Ans. (A)

5. If $A = \begin{bmatrix} 10 & 2k+5 \\ 3k-3 & k+5 \end{bmatrix}$ is a symmetric matrix, the value of k is _____.
(A) 8 (B) 5
(C) −0.4 (D) $\frac{1+\sqrt{1561}}{12}$

Solution: Applying the condition for symmetry,

$$3k-3 = 2k+5$$
$$k = 8$$

Thus, the value of k is 8.

Ans. (A)

6. A uniform light slender beam AB of section modulus EI is pinned by a frictionless joint A to the ground and supported by a light inextensible cable CB to hang a weight W as shown. If the maximum value of W to avoid buckling of the beam AB is obtained as $\beta\pi^2 EI$, where π is the ratio of circumference to diameter of a circle, then the value of β is

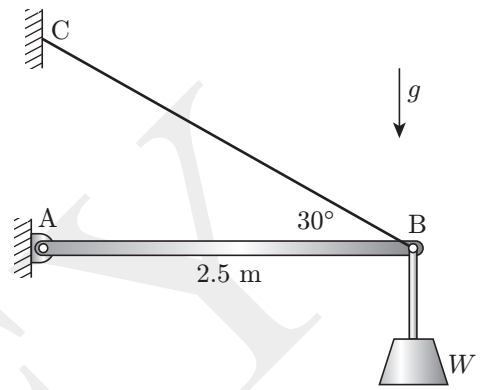

(A) 0.0924 m^{-2} (B) 0.0713 m^{-2}
(C) 0.1261 m^{-2} (D) 0.1417 m^{-2}

Solution: Drawing the free body diagram, we have

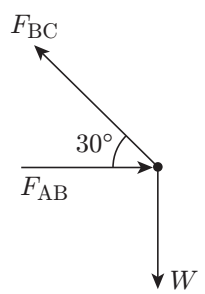

Applying force balance in vertical direction,

$$F_{BC}\sin 30° = W$$
$$\Rightarrow F_{BC} = \frac{W}{0.5}$$

Applying force balance in horizontal direction,

$$F_{AB} = F_{BC}\cos 30°$$
$$= \frac{W}{0.5}\cos 30° = 1.732W$$

The buckling formula for the strut is,

$$F_{AB} = \frac{\pi^2 EI}{l_C^2}$$
$$\Rightarrow 1.732W = \frac{\pi^2 EI}{(2.5)^2}$$
$$\Rightarrow W = \frac{\pi 2EI}{1.732\times(2.5)^2}$$

WILEY

Given that, the maximum value of W to avoid buckling of the beam AB is

$$W = \beta\pi^2 EI$$

So, at maximum value of W, we have

$$\beta\pi^2 EI = \frac{\pi^2 EI}{1.732\times(2.5)^2}$$

$$\Rightarrow \beta = \frac{1}{1.732\times(2.5)^2} = 0.0924$$

Ans. (A)

7. The figure shows a schematic of a simple Watt governor mechanism with the spindle O_1O_2 rotating at an angular velocity ω about a vertical axis. The balls at P and S have equal mass. Assume that there is no friction anywhere and all other components are massless and rigid. The vertical distance between the horizontal plane of rotation of the balls and the pivot O_1 is denoted by h. The value of $h = 400$ mm at a certain ω. If ω is doubled, the value of h will be _____ mm.

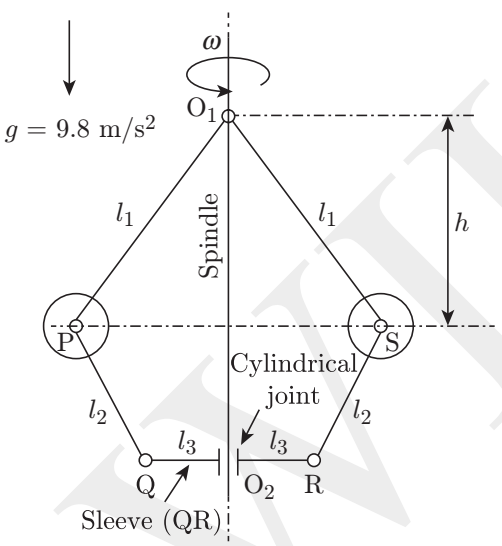

(A) 50 (B) 100
(C) 150 (D) 200

Solution: The Watt governor height equations is

$$h = \frac{g}{\omega^2}$$

$$\Rightarrow h \propto \frac{1}{\omega^2}$$

So,

$$\frac{h_1}{h_2} = \frac{\omega_2^2}{\omega_1^2}$$

$$\Rightarrow \frac{400}{h_2} = \frac{(2\omega_1)^2}{\omega_1^2}$$

$$\Rightarrow h_2 = 100\,\text{mm}$$

Ans. (B)

8. A square threaded screw is used to lift a load W by applying a force F. Efficiency of square threaded screw is expressed as

(A) The ratio of work done by W per revolution to work done by F per revolution
(B) W/F
(C) F/W
(D) The ratio of work done by F per revolution to work done by W per revolution

Solution: The mechanical advantage is given by,

$$MA = \frac{\text{load}(W)}{\text{Effort}(F)}$$

The velocity ratio is given by,

$$v = \frac{\text{Velocity of } F}{\text{Velocity of } W}$$

The efficiency of square threaded screw is

$$\eta = \frac{MA}{V}$$

$$= \frac{\text{load}(W)}{\text{Effort}(F)} \times \frac{\text{Velocity of } F}{\text{Velocity of } W}$$

$$= \frac{\text{Work done per revolution by load } (W)}{\text{Work done per revolution by Effor } (F)}$$

Ans. (A)

9. A CNC worktable is driven in a linear direction by a lead screw connected directly to a stepper motor. The pitch of the lead screw is 5 mm. The stepper motor completes one full revolution upon receiving 600 pulses. If the worktable speed is 5 m/minute and there is no missed pulse, then the pulse rate being received by the stepper motor is

(A) 20 kHz
(B) 10 kHz
(C) 3 kHz
(D) 15 kHz

Solution: The 1 pulse/mm or BLU is given by

$$600 \text{ Pulse} = 5 \text{ mm}$$

$$\Rightarrow 1\,\text{Pulse} = 1\text{ BLU} = \frac{5}{600}\text{ mm/pulse}$$

The frequency can be calculated as,

$$f = \frac{\text{Table speed}}{\text{BLU}}$$

$$= \frac{5\text{ m/min}\times\frac{1\text{ min}}{60\text{ s}}\times\frac{1000\text{ mm}}{1\text{ m}}}{\frac{5}{600}\text{ mm/pulses}} = 10\text{ kHz}$$

Ans. (B)

10. The type of fit between a mating shaft of diameter $25.0^{+0.010}_{-0.010}$ mm and a hole of diameter $25.015^{+0.015}_{-0.015}$ mm is _____.

(A) Clearance (B) Transition
(C) Interference (D) Linear

Solution: The shaft diameter is in the range of 24.99 mm to 25.01 mm.
The hole diameter is in the range of 25 mm to 25.03 mm.
Both shaft and hole are overlapping each other, thus it is a transition fit.

Ans. (B)

11. In a linear programming problem, if a resource is not fully utilized, the shadow price of that resource is

(A) positive (B) negative
(C) zero (D) infinity

Solution: When the resource is not utilized properly, then we assign a zero value to that resource.
The shadow price of a resource is used to maximize the profit, and if the resources available for the allocation are not properly utilized, then it has a zero value.

Ans. (C)

12. Which one of the following is NOT a form of inventory?

(A) Raw materials
(B) Work-in-process materials
(C) Finished goods
(D) CNC Milling Machines

Solution: CNC milling machine is not a form of inventory. It is a machine and we use it as a resource.

Ans. (D)

13. The Clausius inequality holds good for

(A) any process
(B) any cycle
(C) only reversible process
(D) only reversible cycle

Solution: The Clausius inequality is given by,

$$\oint \frac{dQ}{T} \le 0$$

This inequality is applicable to any cyclic process or a complete cycle.

Ans. (B)

14. A tiny temperature probe is fully immersed in a flowing fluid and is moving with zero relative velocity with respect to the fluid. The velocity field in the fluid is $\vec{v} = (2x)\hat{i} + (y+3t)\hat{j}$, and the temperature field in the fluid is $T = 2x^2 + xy + 4t$, where x and y are the spatial coordinates, and t is the time. The time rate of change of temperature recorded by the probe at $(x = 1, y = 1, t = 1)$ is _____.

(A) 4 (B) 0
(C) 18 (D) 14

Solution: The time rate of change of temperature can be calculated as,

$$\begin{aligned}\frac{dT}{dt} &= v_x \frac{dT}{dx} + v_y \frac{dT}{dy} + \frac{dT}{dt} \\ &= (2x)\frac{d(2x^2 + xy + 4t)}{dx} \\ &\quad + (y+3t)\frac{d(2x^2 + xy + 4t)}{dy} \\ &\quad + \frac{d(2x^2 + xy + 4t)}{dt} \\ &= 2x(4x + y) + (y+3t)x + 4\end{aligned}$$

At $x = 1$, $y = 1$, $t = 1$, we get

$$\begin{aligned}\left.\frac{dT}{dt}\right|_{x=1,y=1,t=1} &= 2(1)(4(1)+(1)) + ((1)+3(1))(1) + 4 \\ &= 18\end{aligned}$$

Ans. (C)

15. In the following two-dimensional momentum equation for natural convection over a surface immersed in a quiescent fluid at temperature T_∞ (g is the gravitational acceleration, β is the volumetric thermal expansion coefficient, ν is the kinematic viscosity, u and v are the velocities in x and y directions, respectively, and T is the temperature)

$$u\frac{\partial u}{\partial x} + v\frac{\partial u}{\partial y} = g\beta(T - T_\infty) + \nu\frac{\partial^2 u}{\partial y^2},$$

the term $g\beta(T - T_\infty)$ represents

(A) Ratio of inertial force to viscous force.
(B) Ratio of buoyancy force to viscous force.
(C) Viscous force per unit mass.
(D) Buoyancy force per unit mass.

Solution: The expression for the thermal expansion is given by

$$\beta = \frac{1}{V}\frac{dV}{dT}$$

The given terms will be

$$g\beta(T - T_\infty) = g\frac{1}{V}\frac{dV}{dT}(T - T_\infty)$$

The above term signifies the buoyancy force per unit mass.

Ans. (D)

WILEY

16. Assuming the material considered in each statement is homogeneous, isotropic, linear elastic, and the deformations are in the elastic range, which one or more of the following statement(s) is/are **true**?

(A) A body subjected to hydrostatic pressure has no shear stress.
(B) If a long solid steel rod is subjected to tensile load, then its volume increases.
(C) Maximum shear stress theory is suitable for failure analysis of brittle materials.
(D) If a portion of a beam has zero shear force, then the corresponding portion of the elastic curve of the beam is always straight.

Solution: Taking option (A): Under hydrostatic stress state condition, Mohr's circle will become a point. Every plane will become a principal plane and on all the principal planes, shear stress is zero. So, the option (A) is correct.
Taking option (B): Under axial tensile load, volume of rod increases because longitudinal and lateral strains are tensile and compressive in the nature respectively and longitudinal strain more than lateral strain. So, the option (B) is correct.
Taking option (C): Maximum shear stress theory is more suitable for ductile materials, not for brittle materials. For brittle materials, the maximum principal stress theory is suitable. So, the option (C) is not correct.
Taking option (D): When shear force and bending moment, both are zero, then elastic curve will be a straight line. When shear force is zero and bending moment has a constant non-zero value, then elastic curve will be a circular arc. So, the option (D) is not correct.

Ans. (A, B)

17. Which of the following heat treatment processes is/are used for surface hardening of steels?

(A) Carburizing (B) Cyaniding
(C) Annealing (D) Carbonitriding

Solution: Carburizing, Cyaniding, and Carbonitriding are the process for surface hardening.

Ans. (A, B, D)

18. Which of the following additive manufacturing technique(s) can use a wire as a feedstock material?

(A) Stereolithography
(B) Fused deposition modeling
(C) Selective laser sintering
(D) Directed energy deposition processes

Solution: Fused deposition modeling and Directed energy deposition process are the additive manufacturing techniques uses a wire as a feedstock material.
The stereolithography uses a liquid material as a feedstock material.
Selective laser sintering uses a powder as a feedstock material.

Ans. (B, D)

19. Which of the following methods can improve the fatigue strength of a circular mild steel (MS) shaft?

(A) Enhancing surface finish
(B) Shot peening of the shaft
(C) Increasing relative humidity
(D) Reducing relative humidity

Solution: The increase in relative humidity decreases the fatigue strength of the material, whereas the increasing the surface finish, shot penning of the shaft, and reducing the relative humidity increases the fatigue strength.

Ans. (A, B, D)

20. The figure shows a purely convergent nozzle with a steady, inviscid compressible flow of an ideal gas with constant thermophysical properties operating under choked condition. The exit plane shown in the figure is located within the nozzle. If the inlet pressure (P_0) is increased while keeping the back pressure (P_{back}) unchanged, which of the following statements is/are true?

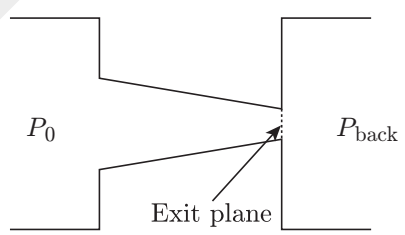

(A) Mass flow rate through the nozzle will remain unchanged.
(B) Mach number at the exit plane of the nozzle will remain unchanged at unity.
(C) Mass flow rate through the nozzle will increase.
(D) Mach number at the exit plane of the nozzle will become more than unity.

Solution: We know that the Mach number for the maximum mass flow rate is unity.
Since the pressure at inlet increases and the back pressure remains constant, therefore the condition of choke will occur. The mass flow rate will increase and then becomes maximum.

Ans. (B, C)

21. The plane of the figure represents a horizontal plane. A thin rigid rod at rest is pivoted without friction about a fixed vertical axis passing through O. Its mass moment of inertia is equal to 0.1 kg cm^2 about O. A point mass of 0.001 kg hits it normally at 200 cm/s at the location shown, and sticks

to it. Immediately after the impact, the angular velocity of the rod is _____ rad/s (in integer).

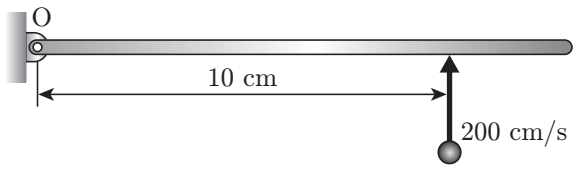

Solution: Applying the conservation of angular momentum, we have

$$mvr = I_{\text{total}}\omega$$

$$\Rightarrow \omega = \frac{mvr}{I_{\text{total}}}$$

$$= \frac{(0.001)(200)(10)}{(0.1\times 0.001\times 10^2)} = 10\,\text{rad/s}$$

Therefore, the angular velocity is 10 rad/s.

Ans. (10)

22. A rigid uniform annular disc is pivoted on a knife edge A in a uniform gravitational field as shown, such that it can execute small amplitude simple harmonic motion in the plane of the figure without slip at the pivot point. The inner radius r and outer radius R are such that $r^2 = R^2/2$, and the acceleration due to gravity is g. If the time period of small amplitude simple harmonic motion is given by $T = \beta\pi\sqrt{R/g}$, where π is the ratio of circumference to diameter of a circle, then $\beta =$ _____ (round off to 2 decimal places).

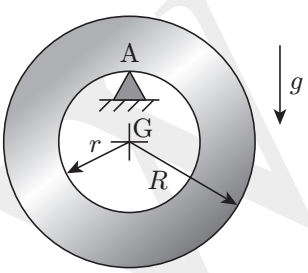

Solution: The inertia about the center of a hollow disk is,

$$I_{\text{CG}} = \frac{1}{2}m(R^2 + r^2)$$

Substitute $r^2 = \dfrac{R^2}{2}$ in above equation, we get

$$I_{\text{CG}} = \frac{1}{2}m\left(R^2 + \frac{R^2}{2}\right) = \frac{3}{4}mR^2$$

The inertia about point A is

$$I_{\text{A}} = I_{\text{CG}} + mr^2 = \frac{3}{4}mR^2 + m\frac{R^2}{2} = \frac{5}{4}mR^2$$

Using D'Alembert's law, we get

$$I\ddot{\theta} + mgr\sin\theta = 0$$

$$\Rightarrow \frac{5}{4}mR^2\ddot{\theta} + mg\frac{R}{\sqrt{2}}\theta = 0$$

$$\Rightarrow \ddot{\theta} + \frac{mg\dfrac{R}{\sqrt{2}}}{\dfrac{5}{4}mR^2}\theta = 0$$

The natural frequency is given by

$$\omega_n^2 = \frac{mg\dfrac{R}{\sqrt{2}}}{\dfrac{5}{4}mR^2} = \frac{2}{\sqrt{5\sqrt{2}}}\sqrt{\frac{g}{R}}$$

The equation of period will be,

$$T = \frac{2\pi}{\omega_n}$$

$$T = \frac{2\pi}{\dfrac{2}{\sqrt{5\sqrt{2}}}\sqrt{\dfrac{g}{R}}}$$

$$T = \sqrt{5\sqrt{2}}\pi\sqrt{\frac{R}{g}}$$

Given that,

$$T = \beta\pi\sqrt{\frac{R}{g}}$$

So, the value of β will be,

$$\beta = \sqrt{5\sqrt{2}} = 2.66$$

Ans. (2.66)

23. Electrochemical machining operations are performed with tungsten as the tool, and copper and aluminum as two different workpiece materials. Properties of copper and aluminum are given in the table below.

Material	**Atomic mass (amu)**	**Valency**	**Density (g/cm^3)**
Copper	63	2	9
Aluminum	27	3	2.7

Ignore overpotentials, and assume that current efficiency is 100% for both the workpiece materials. Under identical conditions, if the material removal rate (MRR) of copper is 100 mg/s, the MRR of aluminum will be _____ mg/s (round-off to two decimal places).

Solution: The current pass through copper is given by

$$I_{\text{Al}} = \frac{\text{MRR} \times F}{e} = \frac{100 \times 10^{-3}\ \text{gm/s} \times 96500}{\frac{63}{2}}$$

$$= 306.3\ \text{A}$$

Since, the aluminum and copper are in series so the current pass through through copper and aluminum is same.
Therefore, the MRR for the aluminum will be,

$$I = \frac{\text{MRR} \times F}{e}$$

$$\Rightarrow 306.35 = \frac{\text{MRR} \times 96500}{\frac{27}{3}}$$

$$\Rightarrow \text{MRR} = 28.57 \times 10^{-3}\ \text{gm/s} = 28.57\,\text{mgm/s}$$

Ans. (28.57)

24. A polytropic process is carried out from an initial pressure of 110 kPa and volume of 5 m^3 to a final volume of 2.5 m^3. The polytropic index is given by $n = 1.2$. The absolute value of the work done during the process is _____ kJ (round off to 2 decimal places).

Solution: The work for the polytropic process is given by,

$$W = \frac{P_2V_2 - P_1V_1}{n-1}$$

The final pressure is given by,

$$P_2 = P_1\left(\frac{V_2}{V_1}\right)^n$$

$$P_2 = 110\left(\frac{2.5}{5}\right)^{1.2}$$

$$P_2 = 252.71\ \text{kPa}$$

Therefore, the work done will be,

$$W = \frac{(252.71)(2.5) - (110)(5)}{1.2 - 1} = 408.92\,\text{kJ}$$

Ans. (408.92)

25. A flat plate made of cast iron is exposed to a solar flux of 600 W/m^2 at an ambient temperature of 25°C. Assume that the entire solar flux is absorbed by the plate. Cast iron has a low temperature absorptivity of 0.21. Use Stefan-Boltzmann constant = 5.669×10^{-8} W/(m^2 K^4). Neglect all other modes of heat transfer except radiation. Under the aforementioned conditions, the radiation equilibrium temperature of the plate is _____ °C (round off to the nearest integer).

Solution: The expression for the heat transfer through the radiation will be,

$$G = \varepsilon\sigma(T^4 - T_\infty^4)$$

$$\Rightarrow 600 = (0.21)(5.67 \times 10^{-8})(T^4 - (273+25)^4)$$

$$\Rightarrow T = 491.33\,\text{K} = 218\,°\text{C}$$

Ans. (218)

Q. No. 26–55 Multiple Choice Question (MCQ) Carry Two Marks Each

26. The value of the integral

$$\oint\left(\frac{6z}{2z^4 - 3z^3 + 7z^2 - 3z + 5}\right)dz$$

evaluated over a counter-clockwise circular contour in the complex plane enclosing only the pole $z = i$, where i is the imaginary unit, is

(A) $(-1+i)\pi$ (B) $(1+i)\pi$
(C) $2(1-i)\pi$ (D) $(2+i)\pi$

Solution: Checking for singularity at $z = i$.

$$f(z) = 2z^4 - 3z^3 + 7z^2 - 3z + 5$$

$$= 2(i)^4 - 3(i)^3 + 7(i)^2 - 3(i) + 5 = 0$$

Thus, we have singular point at $z = i$.
Applying residue theorem,

$$\oint \frac{6z}{2z^4 - 3z^3 + 7z^2 - 3z + 5}dz = 2\pi i(\text{Res}|_{z=i})$$

The residue can be calculated as,

$$\text{Res}|_{z=i} = \lim_{z\to i}(z-i)\frac{6z}{2z^4 - 3z^3 + 7z^2 - 3z + 5}$$

$$= \lim_{z\to i}\frac{6z^2 - 6zi}{2z^4 - 3z^3 + 7z^2 - 3z + 5}$$

$$= \lim_{z\to i}\frac{12z - 6i}{8z^3 - 9z^2 + 14z - 3}$$

$$= \frac{12(i) - 6i}{8(i)^3 - 9(i)^2 + 14(i) - 3} = \frac{i}{i+1}$$

The final solution will be,

$$\oint \frac{6z}{2z^4 - 3z^3 + 7z^2 - 3z + 5}dz = 2\pi i\left(\frac{i}{i+1}\right)$$

$$= (-1+i)\pi$$

Ans. (A)

27. An L-shaped elastic member ABC with slender arms AB and BC of uniform cross-section is clamped at end A and connected to a pin at end C. The pin remains in continuous contact with and is constrained to move in a smooth horizontal slot.

The section modulus of the member is same in both the arms. The end C is subjected to a horizontal force P and all the deflections are in the plane of the figure. Given the length AB is $4a$ and length BC is a, the magnitude and direction of the normal force on the pin from the slot, respectively, are

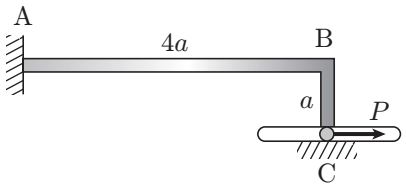

(A) $3P/8$, and downwards
(B) $5P/8$, and upwards
(C) $P/4$, and downwards
(D) $3P/4$, and upwards

Solution: The deflection by force P will be,

$$\Delta_P = \frac{(Pa)(4a)^3}{2EI} = \frac{8Pa^3}{EI}$$

The deflection by a reaction force F in downward direction,

$$\Delta_F = \frac{F(4a)^3}{3EI} = \frac{64Fa^3}{EI}$$

Since, the deflection by force P is equal to the reaction force F. So,

$$\Delta_P = \Delta_F$$

$$\Rightarrow \frac{8Pa^3}{EI} = \frac{64Fa^3}{EI}$$

$$\Rightarrow F = \frac{3P}{8} \text{ (In downward direction)}$$

Ans. (A)

28. A planar four-bar linkage mechanism with 3 revolute kinematic pairs and 1 prismatic kinematic pair is shown in the figure, where AB $\perp$ CE and FD $\perp$ CE. The T-shaped link CDEF is constructed such that the slider B can cross the point D, and CE is sufficiently long. For the given lengths as shown, the mechanism is

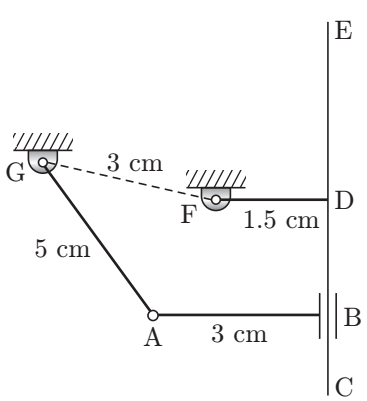

(A) a Grashof chain with links AG, AB, and CDEF completely rotatable about the ground link FG
(B) a non-Grashof chain with all oscillating links
(C) a Grashof chain with AB completely rotatable about the ground link FG, and oscillatory links AG and CDEF
(D) on the border of Grashof and non-Grashof chains with uncertain configuration(s)

Solution: The given chain is the Gershoff chain with links AG, AB, and CDEF completely rotatable about the ground link FG.

Ans. (A)

29. Consider a forced single degree-of-freedom system governed by

$$\ddot{x}(t) + 2\xi\omega_n\dot{x}(t) + \omega_n^2 x(t) = \omega_n^2 \cos(\omega t),$$

where ξ and ω_n are the damping ratio and undamped natural frequency of the system, respectively, while ω is the forcing frequency. The amplitude of the forced steady state response of this system is given by $[(1-r^2)^2 + (2\xi r)^2]^{-1/2}$, where $r = \omega/\omega_n$. The peak amplitude of this response occurs at a frequency $\omega = \omega_p$. If ω_d denotes the damped natural frequency of this system, which one of the following options is true?

(A) $\omega_p < \omega_d < \omega_n$
(B) $\omega_p = \omega_d < \omega_n$
(C) $\omega_d < \omega_n = \omega_p$
(D) $\omega_d < \omega_n < \omega_p$

Solution: The expression for the amplitude of the given system is given by,

$$A = \frac{f_o/s}{\sqrt{(1-(\omega/\omega_n)^2)^2 + (2\zeta\omega/\omega_n)^2}}$$

For the maximum amplitude,

$$\frac{dA}{d(\omega/\omega_n)} = 0$$

$$\frac{dA}{d(\omega/\omega_n)} = 2\left(1-\left(\frac{\omega}{\omega_n}\right)^2\right) + 4\zeta^2(2)\left(\frac{\omega}{\omega_n}\right)$$

$$\Rightarrow -2 + 2\left(\frac{\omega}{\omega_n}\right)^2 + 4\zeta^2 = 0$$

$$\Rightarrow -2\left(\frac{\omega}{\omega_n}\right)^2 = 2 - 4\zeta^2$$

$$\Rightarrow \left(\frac{\omega}{\omega_n}\right)^2 = 1 - 2\zeta^2$$

$$\Rightarrow \left(\frac{\omega}{\omega_n}\right) = \sqrt{1-2\zeta^2}$$

$$\Rightarrow \omega = \omega_n\sqrt{1-2\zeta^2}$$

The damping frequency is given by,

$$\omega_d = \omega_n\sqrt{1-2\zeta^2}$$

Therefore, we can write,

$$\omega < \omega_d < \omega_n$$

Ans. (A)

30. A bracket is attached to a vertical column by means of two identical rivets U and V separated by a distance of $2a = 100$ mm, as shown in the figure. The permissible shear stress of the rivet material is 50 MPa. If a load $P = 10$ kN is applied at an eccentricity $e = \sqrt{7}a$, the minimum cross-sectional area of each of the rivets to avoid failure is _____ mm^2.

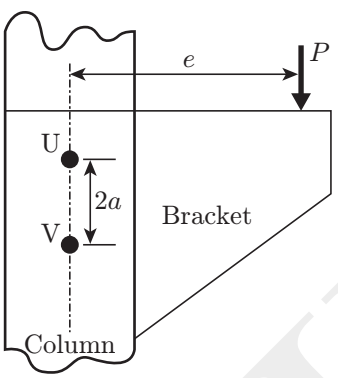

(A) 800 (B) 25
(C) $100\sqrt{7}$ (D) 200

Solution: The primary force on the rivets is,

$$F_1 = \frac{P}{2} = \frac{10\,\text{kN}}{2} = 5\,\text{kN}$$

The secondary force on the rivet is,

$$F_2 = \frac{Pe}{2a} = \frac{P3\sqrt{7}a}{2a} = \frac{3\sqrt{7}(10)}{2} = 39.68\,\text{kN}$$

The resultant force will be,

$$R = \sqrt{F_1^2 + F_2^2} = \sqrt{(5\,\text{kN})^2 + (39.68\,\text{kN})^2} = 40\,\text{kN}$$

The permissible shear stress of the rivet material is given by,

$$\tau = \frac{R}{A}$$

$$\Rightarrow 50 = \frac{40\times10^3}{A}$$

$$\Rightarrow A = 800\,\text{mm}^2$$

Ans. (A)

31. In Fe-Fe_3C phase diagram, the eutectoid composition is 0.8 weight % of carbon at 725 °C. The maximum solubility of carbon in α-ferrite phase is 0.025 weight % of carbon. A steel sample, having no other alloying element except 0.5 weight % of carbon, is slowly cooled from 1000 °C to room temperature. The fraction of pro-eutectoid α-ferrite in the above steel sample at room temperature is

(A) 0.387 (B) 0.864
(C) 0.475 (D) 0.775

Solution: The mass-fraction of pro-eutectoid is given by,

$$\frac{0.8-0.5}{0.8-0.025} = 0.387$$

Ans. (A)

32. Activities A to K are required to complete a project. The time estimates and the immediate predecessors of these activities are given in the table. If the project is to be completed in the minimum possible time, the latest finish time for the activity G is _____ hours.

Activity	Time (hours)	Immediate predecessors
A	2	–
B	3	–
C	2	–
D	4	A
E	5	B
F	4	B
G	3	C
H	10	D, E
I	5	F
J	8	G
K	3	H, I, J

(A) 5 (B) 10
(C) 8 (D) 9

Solution: The network diagram of the given data is shown below,

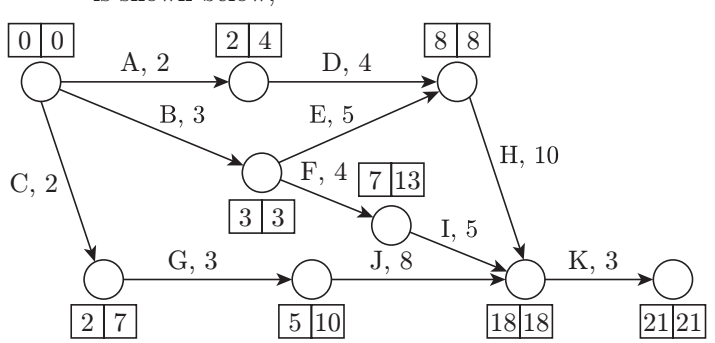

Thus, the latest finish time for G is 10.

Ans. (B)

33. A solid spherical bead of lead (uniform density = 11000 kg/m^3) of diameter $d = 0.1$ mm sinks with a constant velocity v in a large stagnant pool of a liquid (dynamic viscosity = 1.1×10^{-3} kg/(m s)). The coefficient of drag is given by $c_D = 24/\text{Re}$, where the Reynolds number (Re) is defined on the basis of the diameter of the bead. The drag force acting on the bead is expressed as $D = (c_D)(0.5\rho v^2)(\pi d^2/4)$, where ρ is the density of the liquid. Neglect the buoyancy force. Using $g = 10$ m/s^2, the velocity v is _____ m/s.

(A) $\frac{1}{24}$ (B) $\frac{1}{6}$

(C) $\frac{1}{18}$ (D) $\frac{1}{12}$

Solution: The drag force on the lead is,

$$D = (c_D)(0.5\rho v^2)\left(\frac{\pi}{4}d^2\right) = \left(\frac{24}{\text{Re}}\right)(0.5\rho v^2)\left(\frac{\pi}{4}d^2\right)$$

$$= \left(\frac{24}{\rho v d/\mu}\right)(0.5\rho v^2)\left(\frac{\pi}{4}d^2\right) = (12v\mu)\left(\frac{\pi}{4}d\right)$$

The drag force is equal to the weight, so

$$W = D$$

$$\Rightarrow \rho_{\text{body}}\left(\frac{4}{3}\pi\left(\frac{d}{2}\right)^3\right)g = (12v\mu)\left(\frac{\pi}{4}d\right)$$

$$\Rightarrow \rho_{\text{body}}\left(\frac{d^2}{3}\right)g = (6v\mu)$$

$$\Rightarrow v = \rho_{\text{body}}\left(\frac{d^2}{18\mu}\right)g = (11000)\left(\frac{(0.1\times10^{-3})^2}{18(1.1\times10^{-3})}\right)(10)$$

$$= \frac{1}{18}$$

Ans. (C)

34. Consider steady, one-dimensional compressible flow of a gas in a pipe of diameter 1 m. At one location in the pipe, the density and velocity are 1 kg/m^3 and 100 m/s, respectively. At a downstream location in the pipe, the velocity is 170 m/s. If the pressure drop between these two locations is 10 kPa, the force exerted by the gas on the pipe between these two locations is _____ N.

(A) $350\pi^2$ (B) 750π

(C) 1000π (D) 3000

Solution: Applying the conservation of momentum, we have

$$(p_1 - p_2)A - F = \dot{m}(v_2 - v_1)$$

$$\Rightarrow 10\times10^3 \times \frac{\pi}{4}(1)^2 - F = \rho_1 A_1 v_1 (v_2 - v_1)$$

$$\Rightarrow 2500\pi - F = 1\times\frac{\pi}{4}(1)^2 \times 100 \times 70$$

$$\Rightarrow F = 750\pi$$

Ans. (B)

35. Consider a rod of uniform thermal conductivity whose one end ($x = 0$) is insulated and the other end ($x = L$) is exposed to flow of air at temperature T_∞ with convective heat transfer coefficient h. The cylindrical surface of the rod is insulated so that the heat transfer is strictly along the axis of the rod. The rate of internal heat generation per unit volume inside the rod is given as

$$\dot{q} = \cos\left(\frac{2\pi x}{L}\right).$$

The steady state temperature at the mid-location of the rod is given as T_A. What will be the temperature at the same location, if the convective heat transfer coefficient increases to $2h$?

(A) $T_A + \frac{\dot{q}L}{2h}$

(B) $2T_A$

(C) T_A

(D) $T_A\left(1 - \frac{\dot{q}L}{4\pi h}\right) + \frac{\dot{q}L}{4\pi h}T_\infty$

Solution: The temperature does not affect with the convective heat transfer coefficient. Therefore the temperature remains constant, that is, T_A.

Ans. (C)

36. The system of linear equations in real (x, y) given by

$$\begin{pmatrix} x & y \end{pmatrix}\begin{bmatrix} 2 & 5-2\alpha \\ \alpha & 1 \end{bmatrix} = \begin{pmatrix} 0 & 0 \end{pmatrix}$$

involves a real parameter α and has infinitely many non-trivial solutions for special value(s) of α. Which one or more among the following options is/are non-trivial solution(s) of (x, y) for such special value(s) of α?

(A) $x = 2, y = -2$ (B) $x = -1, y = 4$

(C) $x = 1, y = 1$ (D) $x = 4, y = -2$

Solution: The determinate for non-trivial solution is zero,

$$|A| = 0$$

$$\Rightarrow \begin{vmatrix} 2 & 5-2\alpha \\ \alpha & 1 \end{vmatrix} = 0$$

$$\Rightarrow 2 - \alpha(5 - 2\alpha) = 0$$

$$\Rightarrow 2 - 5\alpha + 2\alpha^2 = 0$$

$$\Rightarrow \alpha = 2, \frac{1}{2}$$

For $\alpha = 2$, the eigen vector will be:

$$[x \quad y]\begin{bmatrix}2 & 1\\ 1 & 1\end{bmatrix} = [0 \quad 0]$$

$$\Rightarrow 2x + 2y = 0$$

$$\Rightarrow x + y = 0$$

$$\Rightarrow x = -y$$

For $\alpha = \frac{1}{2}$, the eigen vector will be:

$$[x \quad y]\begin{bmatrix}2 & 4\\ \frac{1}{2} & 1\end{bmatrix} = [0 \quad 0]$$

$$\Rightarrow 2x + \frac{1}{2}y = 0$$

$$\Rightarrow 4x + y = 0$$

$$\Rightarrow x = \frac{-y}{4}$$

Option (A) and (B) satisfy the given condition.

Ans. (A, B)

37. Let a random variable X follow Poisson distribution such that Prob(X = 1) = Prob(X = 2). The value of Prob(X = 3) is _____ (round off to 2 decimal places).

Solution: Given that,

$$P(X = 1) = P(X = 2)$$

The Poisson distribution can be applied as,

$$\frac{\lambda e^{-\lambda}}{1!} = \frac{\lambda^2 e^{-\lambda}}{2!}$$

$$\Rightarrow 2\lambda = \lambda^2$$

$$\Rightarrow \lambda = 2$$

The probability at $X = 3$ will be,

$$P(X = 3) = \frac{\lambda^x e^{-\lambda}}{x!} = \frac{(2)^3 e^{-2}}{3!} = 0.18$$

Ans. (0.18)

38. Consider two vectors:

$$\vec{a} = 5\hat{i} + 7\hat{j} + 2\hat{k}$$

$$\vec{b} = 3\hat{i} - \hat{j} + 6\hat{k}$$

Magnitude of the component of $\vec{a}$ orthogonal to $\vec{b}$ in the plane containing the vectors $\vec{a}$ and $\vec{b}$ is _____ (round off to 2 decimal places).

Solution: The angle between the two vectors will be,

$$\cos\theta = \frac{\vec{a}\cdot\vec{b}}{|\vec{a}||\vec{b}|}$$

$$= \frac{(5i + 7j + 2k)\cdot(3i - j + 6k)}{\left|\sqrt{5^2 + 7^2 + 2^2}\right|\left|\sqrt{3^2 + (-1)^2 + 6^2}\right|}$$

$$\Rightarrow \theta = 70.495°$$

The required answer is,

$$\left||a|\sin\theta\right| = \left|\sqrt{78}\sin(70.495°)\right| = 8.32$$

Ans. (8.32)

39. A structure, along with the loads applied on it, is shown in the figure. Self-weight of all the members is negligible and all the pin joints are friction-less. AE is a single member that contains pin C. Likewise, BE is a single member that contains pin D. Members GI and FH are overlapping rigid members. The magnitude of the force carried by member CI is _____ kN (in integer).

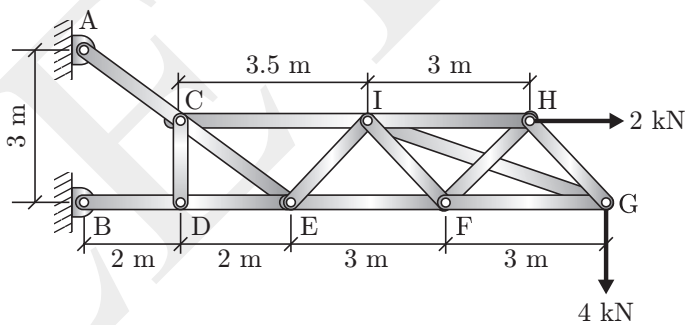

Solution: The length of CD by similar triangle property,

$$\frac{CD}{DE} = \frac{AB}{BE}$$

$$\Rightarrow CD = \frac{2\times 3}{4} = 1.5\,m$$

The net moment about the point E would be,

$$2\times 1.5 - T_1 \times 1.5 + 4\times 6 = 0$$

$$\Rightarrow T_1 = \frac{24 + 3}{1.5} = 18\,kN$$

Here, T_1 is the force in the member CI.

Ans. (18)

40. Two rigid massless rods PR and RQ are joined at frictionless pin-joint R and are resting on ground at P and Q, respectively, as shown in the figure. A vertical force F acts on the pin R as shown. When the included angle $\theta < 90°$, the rods remain in static equilibrium due to Coulomb friction between the rods and ground at locations P and Q. At $\theta = 90°$, impending slip occurs simultaneously at points P and Q. Then the ratio of the coefficient of friction at Q to that at P (μ_Q/μ_P) is _____ (round off to two decimal places).

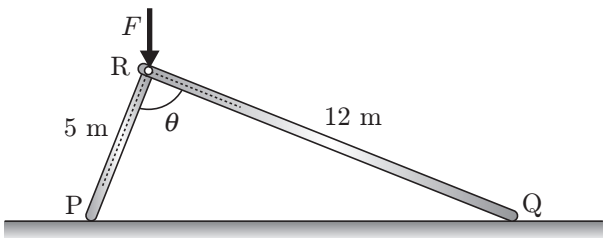

Solution: The coefficient of friction at point P will be,

$$\mu_P = \frac{1}{\tan\alpha}$$

Here, α is the angle RPQ.
The coefficient of friction at point Q will be,

$$\mu_Q = \frac{1}{\tan\beta}$$

Here, β is the angle RQP.
The ratio of the coefficient of friction at point Q and the coefficient of friction at point P is,

$$\frac{\mu_Q}{\mu_P} = \frac{\tan\alpha}{\tan\beta}$$

For the limiting condition when angle PRQ = 90°, then,

$$\frac{\mu_Q}{\mu_P} = \frac{\tan\alpha}{\tan\beta} = \frac{12/5}{5/12} = 5.76$$

Ans. (5.76)

41. A cylindrical disc of mass $m = 1$ kg and radius $r = 0.15$ m was spinning at $\omega = 5$ rad/s when it was placed on a flat horizontal surface and released (refer to the figure). Gravity g acts vertically downwards as shown in the figure. The coefficient of friction between the disc and the surface is finite and positive. Disregarding any other dissipation except that due to friction between the disc and the surface, the horizontal velocity of the center of the disc, when it starts rolling without slipping, will be _____ m/s (round off to 2 decimal places).

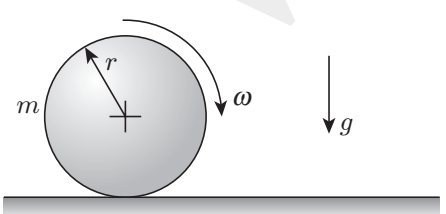

Solution: Applying the Newton's second law,

$$F_{net} = ma;$$
$$f = ma'$$

Here, f is the friction.

The net torque will be,

$$\tau = I\alpha$$
$$\Rightarrow fr = \frac{mr^2}{2}\alpha$$
$$\Rightarrow f = \frac{mr\alpha}{2}$$

Equating the friction force, we get

$$ma' = \frac{mr\alpha}{2}$$
$$a' = \frac{r\alpha}{2}$$

The kinematic equation is,

$$v = u - a't$$
$$\Rightarrow at = r\omega - \alpha rt$$
$$\Rightarrow \frac{r\alpha}{2}t = r\omega - \alpha rt$$
$$\Rightarrow \alpha t = \frac{2}{3}\omega$$

The final velocity will be,

$$v = r(\omega - \alpha t)$$
$$= r\left(\omega - \frac{2}{3}\omega\right) = \frac{r\omega}{3}$$
$$= \frac{0.15\times 5}{3} = 0.25 \text{ m/s}$$

Ans. (0.25)

42. A thin-walled cylindrical pressure vessel has mean wall thickness of t and nominal radius of r. The Poisson's ratio of the wall material is 1/3. When it was subjected to some internal pressure, its nominal perimeter in the cylindrical portion increased by 0.1% and the corresponding wall thickness became $\bar{t}$. The corresponding change in the wall thickness of the cylindrical portion, that is, $100\times(\bar{t}-t)/t$, is _____% (round off to 3 decimal places).

Solution: The expression for the Hoop strain is given by,

$$\varepsilon_H = \frac{PD}{4tE}(2-\mu)$$
$$\Rightarrow 0.1\% = \frac{PD}{4tE}(2-\mu)$$
$$\Rightarrow \frac{PD}{4tE} = \frac{0.1\%}{2-\mu} = \frac{0.1}{100(2-\mu)}$$

The radial strain is given by,

$$\varepsilon_r = -3\mu\frac{PD}{4tE}$$

$$\Rightarrow \frac{\delta t}{t} = -3\mu \frac{PD}{4tE}$$

$$\Rightarrow \frac{\delta t}{t} = -3\mu\left[\frac{0.1}{100(2-\mu)}\right]$$

$$= -3\left(\frac{1}{3}\right)\left[\frac{0.1}{100\left(2-\frac{1}{3}\right)}\right] = -0.06\%$$

Ans. (−0.060)

43. A schematic of an epicyclic gear train is shown in the figure. The sun (gear 1) and planet (gear 2) are external, and the ring gear (gear 3) is internal. Gear 1, gear 3 and arm OP are pivoted to the ground at O. Gear 2 is carried on the arm OP via the pivot joint at P, and is in mesh with the other two gears. Gear 2 has 20 teeth and gear 3 has 80 teeth. If gear 1 is kept fixed at 0 rpm and gear 3 rotates at 900 rpm counter clockwise (ccw), the magnitude of angular velocity of arm OP is _____rpm (in integer).

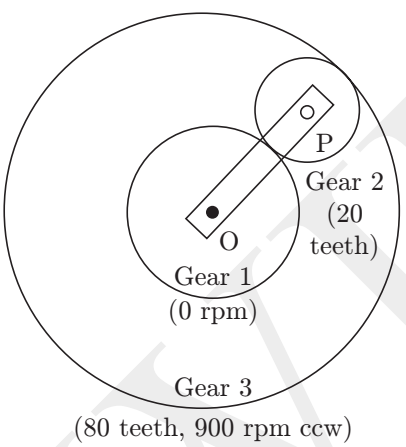

Solution: Applying the radius relation,

$$r_1 + 2r_2 = r_3$$

$$\frac{mT_1}{2} + \frac{2mT_2}{2} = \frac{mT_3}{2}$$

$$T_1 = T_3 - 2T_2$$

$$T_1 = 80 - 2(20)$$

$$T_1 = 40$$

The table can be drawn as,

Motions	Arm	1(40)	2(20)	3(80)
Sun speed $+x$(CW)	0	$+x$	$-x(40/20)$	$-x(40/20)$ $(20/80)$
Arm effect	y	$y+x$	$y-2x$	$y-(x/2)$

The speed of gear 1 N_1 will be,

$$y + x = 0 \qquad (1)$$

Speed of gear 3 is given as,

$$N_3 = 900$$

$$y - \frac{x}{2} = 900 \qquad (2)$$

The speeds will be,

$$x = -600\,\text{rpm and } y = 600\,\text{rpm (CCW)}$$

Ans. (600)

44. Under orthogonal cutting condition, a turning operation is carried out on a metallic workpiece at a cutting speed of 4 m/s. The orthogonal rake angle of the cutting tool is 5°. The uncut chip thickness and width of cut are 0.2 mm and 3 mm, respectively. In this turning operation, the resulting friction angle and shear angle are 45° and 25°, respectively. If the dynamic yield shear strength of the workpiece material under this cutting condition is 1000 MPa, then the cutting force is _____ N (round off to one decimal place).

Solution: From the Merchant's analysis, we have

$$\frac{F_C}{F_S} = \frac{R\cos(\beta-\alpha)}{R\cos(\phi+\beta-\alpha)}$$

And $$F_S = \tau_S A = \tau_S \times \frac{\omega t_1}{\sin\phi}$$

So, the cutting force is given by,

$$F_C = \tau_s \frac{\omega t_1}{\sin\phi}\frac{\cos(\beta-\alpha)}{\cos(\phi+\beta-\alpha)}$$

$$= 1000\frac{3\times 0.1}{\sin 25^\circ}\frac{\cos(45^\circ-5^\circ)}{\cos(25^\circ+45^\circ-5^\circ)} = 2568.62\,\text{N}$$

Ans. (2568.6)

45. A 1 mm thick cylindrical tube, 100 mm in diameter, is orthogonally turned such that the entire wall thickness of the tube is cut in a single pass. The axial feed of the tool is 1 m/minute and the specific cutting energy (u) of the tube material is 6 J/mm^3. Neglect contribution of feed force towards power. The power required to carry out this operation is _____ kW (round off to one decimal place).

Solution: The power required to carry out this operation is calculated as,

$$P = E \times \pi D t \times f$$

$$= 6\ \text{J/mm}^3 \times (\pi \times 100 \times 1) \times \frac{1\times 10^3}{60} = 31.40\,\text{kW}$$

Ans. (31.4)

46. A 4 mm thick aluminum sheet of width $w = 100$ mm is rolled in a two-roll mill of roll diameter 200 mm each. The workpiece is lubricated with a mineral oil, which gives a coefficient of friction,

$\mu = 0.1$. The flow stress (σ) of the material in MPa is $\sigma = 207 + 414\varepsilon$, where ε is the true strain. Assuming rolling to be a plane strain deformation process, the roll separation force (F) for maximum permissible draft (thickness reduction) is _____ kN (round off to the nearest integer).

Use: $F = 1.15\bar{\sigma}\left(1 + \frac{\mu L}{2\bar{h}}\right)wL$, where $\bar{\sigma}$ is average flow stress, L is roll-workpiece contact length, and $\bar{h}$ is the average sheet thickness.

Solution: The final thickness is given by,

$$h_0 - h_f = \mu^2 R$$
$$\Rightarrow 4 - h_f = (0.1)^2(100)$$
$$\Rightarrow h_f = 3\,\text{mm}$$

The strain is given by,

$$\sigma = 207 + \frac{414\varepsilon}{2} = 207 + \frac{414}{2}\left(\ln\frac{h_0}{h_f}\right)$$
$$= 207 + \frac{414}{2}\left(\ln\frac{4}{3}\right) = 266.53\,\text{MPa}$$

The roll separating force will be,

$$F = 1.15\sigma\left(1 + \frac{\mu L}{2\bar{h}}\right)wL$$
$$= 1.15(\sigma)\left(1 + \frac{\mu\sqrt{R\times(h_0 - h_i)}}{2\left(\frac{(h_0 + h_i)}{2}\right)}\right)w\sqrt{R\times(h_0 - h_i)}$$
$$= 1.15(266.53)\left(1 + \frac{(0.1)\sqrt{100\times(4-3)}}{2\left(\frac{(4+3)}{2}\right)}\right)(100)\sqrt{100\times(4-3)}$$
$$= 351\,\text{kN}$$

Ans. (351)

47. Two mild steel plates of similar thickness, in butt-joint configuration, are welded by gas tungsten arc welding process using the following welding parameters.

Welding	voltage 20 V
Welding current	150 A
Welding speed	5 mm/s

A filler wire of the same mild steel material having 3 mm diameter is used in this welding process. The filler wire feed rate is selected such that the final weld bead is composed of 60% volume of filler and 40% volume of plate material. The heat required to melt the mild steel material is 10 J/mm^3. The heat transfer factor is 0.7 and melting factor is 0.6. The feed rate of the filler wire is _____ mm/s (round off to one decimal place).

Solution: The efficiency is given by,

$$\eta_h = \frac{H_m}{VI\eta_m/Av}$$
$$\Rightarrow 0.6 = \frac{10}{20\times150\times0.7/(A\times5)}$$
$$\Rightarrow A = 25.2\,\text{mm}^2$$

Applying volume consistency,

$$A_e \times f_e = A\times\eta_h\times v$$
$$\Rightarrow \frac{\pi}{4}\times3^2\times f_e = 25.2\times0.6\times5$$
$$\Rightarrow f_e = 10.71\,\text{mm/s}$$

Ans. (10.7)

48. An assignment problem is solved to minimize the total processing time of four jobs (1, 2, 3 and 4) on four different machines such that each job is processed exactly by one machine and each machine processes exactly one job. The minimum total processing time is found to be 500 minutes. Due to a change in design, the processing time of Job 4 on each machine has increased by 20 minutes. The revised minimum total processing time will be _____ minutes (in integer).

Solution: The processing time will be,

$$T = 500 + 20 = 520\,\text{min}$$

Ans. (520)

49. The product structure diagram shows the number of different components required at each level to produce one unit of the final product P. If there are 50 units of on-hand inventory of component A, the number of additional units of component A needed to produce 10 units of product P is _____ (in integer).

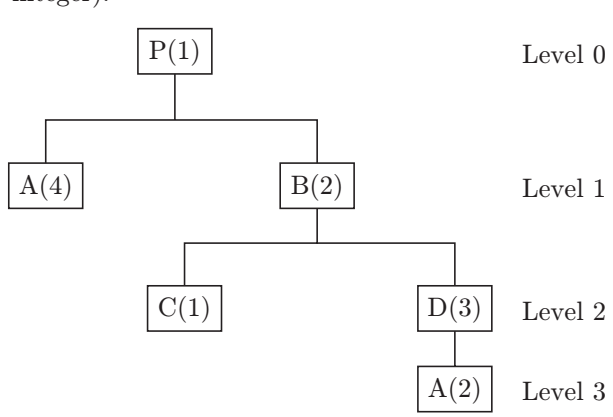

Solution: The values at each level is,

$$n(A) = 4 \times 10 = 40$$
$$n(B) = 20$$
$$n(C) = 60$$
$$n(D) = 120$$

Total units of A will be,

$$N = 40 + 120 = 160$$

Since we have 50 units in hand therefore,

$$N = 160 - 50 = 110$$

Ans. (110)

50. Consider a one-dimensional steady heat conduction process through a solid slab of thickness 0.1 m. The higher temperature side A has a surface temperature of 80 °C, and the heat transfer rate per unit area to low temperature side B is 4.5 kW/m^2. The thermal conductivity of the slab is 15 W/(m K). The rate of entropy generation per unit area during the heat transfer process is _____ W/(m^{2}K) (round off to 2 decimal places).

Solution: The heat transfer rate is given by,

$$\dot{Q} = kA\frac{(T_1 - T_2)}{L}$$
$$\Rightarrow 4500 = 15 \times 1 \times \frac{(353 - T_2)}{0.1}$$
$$\Rightarrow T_2 = 323\,\text{K}$$

The entropy generation is,

$$\dot{S}_{\text{gen}} = \dot{Q}\left(\frac{1}{T_2} - \frac{1}{T_1}\right) = (4500)\left(\frac{1}{323} - \frac{1}{353}\right)$$
$$= 1.184 \approx 1.18\,\text{W/(K}\cdot\text{m}^2)$$

Ans. (1.18)

51. In a steam power plant based on Rankine cycle, steam is initially expanded in a high-pressure turbine. The steam is then reheated in a reheater and finally expanded in a low-pressure turbine. The expansion work in the high-pressure turbine is 400 kJ/kg and in the low-pressure turbine is 850 kJ/kg, whereas the pump work is 15 kJ/kg. If the cycle efficiency is 32%, the heat rejected in the condenser is _____ kJ/kg (round off to 2 decimal places).

Solution: The cycle efficiency is given by,

$$\eta = \frac{W_{T1} + W_{T1} - W_p}{Q_S}$$
$$\Rightarrow 0.32 = \frac{400 + 850 - 15}{Q_S}$$
$$\Rightarrow Q_S = 3859.37\,\text{kJ/kg}$$

The cycle efficiency is also given by,

$$\eta = 1 - \frac{Q_R}{Q_S}$$
$$\Rightarrow 0.32 = 1 - \frac{Q_R}{3859.37}$$
$$\Rightarrow Q_R = 2624.37 \approx 2624.4\,\text{kJ/kg}$$

Ans. (2624.4)

52. An engine running on an air standard Otto cycle has a displacement volume 250 cm^3 and a clearance volume 35.7 cm^3. The pressure and temperature at the beginning of the compression process are 100 kPa and 300 K, respectively. Heat transfer during constant-volume heat addition process is 800 kJ/kg. The specific heat at constant volume is 0.718 kJ/(kg K) and the ratio of specific heats at constant pressure and constant volume is 1.4. Assume the specific heats to remain constant during the cycle. The maximum pressure in the cycle is _____ kPa (round off to the nearest integer).

Solution: The final temperature of the compression is given by,

$$\frac{T_2}{T_1} = \left(\frac{V_1}{V_2}\right)^{\gamma-1} = \left(\frac{V_C + V_S}{V_C}\right)^{\gamma-1}$$
$$\Rightarrow \frac{T_2}{300} = \left(\frac{35.7 + 250}{35.7}\right)^{1.4-1}$$
$$\Rightarrow T_2 = 1803.4\,\text{K}$$

The final pressure of the compression is given by,

$$\frac{P_2}{P_1} = \left(\frac{V_C + V_S}{V_C}\right)^{\gamma}$$
$$\Rightarrow \frac{P_2}{100} = \left(\frac{35.7 + 250}{35.7}\right)^{1.4}$$
$$\Rightarrow P_2 = 1837.92\,\text{kPa}$$

The pressure and temperature are directly related therefore final pressure of second cycle is given by,

$$\frac{P_2}{P_3} = \frac{T_2}{T_3}$$
$$\Rightarrow \frac{1837.92}{P_3} = \frac{689.22}{1803.426}$$
$$\Rightarrow P_3 = 4809.136 \approx 4809\,\text{kPa}$$

Ans. (4809)

53. A steady two-dimensional flow field is specified by the stream function

$$\phi = kx^3y,$$

where x and y are in meter and the constant $k = 1$ m^{-2}s^{-1}. The magnitude of acceleration at a point $(x, y) = (1\text{ m}, 1\text{ m})$ is _____ m/s^2 (round off to 2 decimal places).

Solution: The U-component of velocity is

$$U = \frac{\partial \psi}{\partial y} = \frac{\partial (kx^3 y)}{\partial y} = kx^3$$

Where $k = 1\ \text{m}^{-2}\text{s}^{-1}$, we get

$$U = x^3$$

The V-component of velocity is

$$V = -\frac{\partial \psi}{\partial x} = -\frac{\partial (kx^3 y)}{\partial x} = -k3x^2 y$$

Where $k = 1\ \text{m}^{-2}\text{s}^{-1}$, we get

$$V = -3x^2 y$$

The x-component of acceleration is,

$$a_x = U\frac{\partial U}{\partial x} + V\frac{\partial U}{\partial y}$$

$$= x^3\frac{\partial x^3}{\partial x} + (-3x^2 y)\frac{\partial x^3}{\partial y} = 3x^5$$

At $x = 1$, $y = 1$ we have

$$a_x = 3(1)^5 = 3$$

The y-component of acceleration is,

$$a_y = U\frac{\partial V}{\partial x} + V\frac{\partial V}{\partial y}$$

$$= x^3\frac{\partial(-3x^2 y)}{\partial x} + (-3x^2 y)\frac{\partial(-3x^2 y)}{\partial y}$$

$$= x^3(6xy) + (-3x^2 y)(-3x^2)$$

At $x = 1$, $y = 1$ we have

$$a_y = 3$$

The net acceleration will be,

$$a = \sqrt{a_x^2 + a_y^2}$$

$$= \sqrt{3^2 + 3^2} = 4.24$$

Ans. (4.24)

54. Consider a solid slab (thermal conductivity, $k = 10$ W/(m K)) with thickness 0.2 m and of infinite extent in the other two directions as shown in the figure. Surface 2, at 300 K, is exposed to a fluid flow at a free stream temperature (T_∞) of 293 K, with a convective heat transfer coefficient (h) of 100 W/(m^2 K). Surface 2 is opaque, diffuse and gray with an emissivity (ε) of 0.5 and exchanges heat by radiation with very large surroundings at 0 K. Radiative heat transfer inside the solid slab is neglected. The Stefan-Boltzmann constant is 5.67×10^{-8} W/(m^2 K^4). The temperature T_1 of Surface 1 of the slab, under steady-state conditions, is _____ K (round off to the nearest integer).

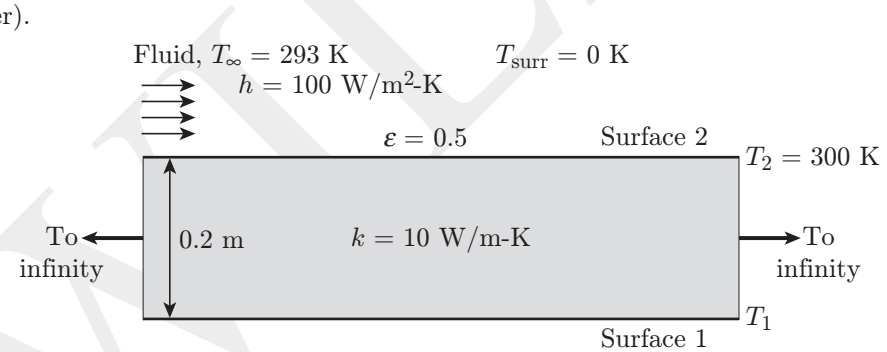

Solution: Applying energy balance on the surface 2, we get

$$\dot{q}_{cond} = \dot{q}_{conv} + \dot{q}_{rad}$$

$$\Rightarrow k\frac{(T_1 - T_2)}{L} = h(T_2 - T_\infty) + \sigma\varepsilon(T_2^4 - T_\infty^4)$$

$$\Rightarrow 10\frac{(T_1 - 3000)}{0.2} = 100(300 - 293)$$

$$+ [5.67 \times 10^{-8} \times 0.5 \times (300^4 - 0)]$$

$$\Rightarrow T_1 \approx 319 \text{ K}$$

Ans. (319)

55. During open-heart surgery, a patient's blood is cooled down to 25 °C from 37 °C using a concentric tube counter-flow heat exchanger. Water enters the heat exchanger at 4 °C and leaves at 18 °C. Blood flow rate during the surgery is 5 L/minute.

Use the following fluid properties:

Fluid	**Density (kg/m^3)**	**Specific heat (J/(kg K))**
Blood	1050	3740
Water	1000	4200

Effectiveness of the heat exchanger is _____ (round off to 2 decimal places).

Solution: The effectiveness of the heat exchanger is given by,

$$\varepsilon = \frac{T_{C,e} - T_{C,i}}{T_{H,i} - T_{C,i}} = \frac{18 - 4}{37 - 4} = 0.42$$

Ans. (0.42)